NEMTEK
Electric Fencing Products

NEMTEK Connect Device Gateway 2G

Instruction Manual

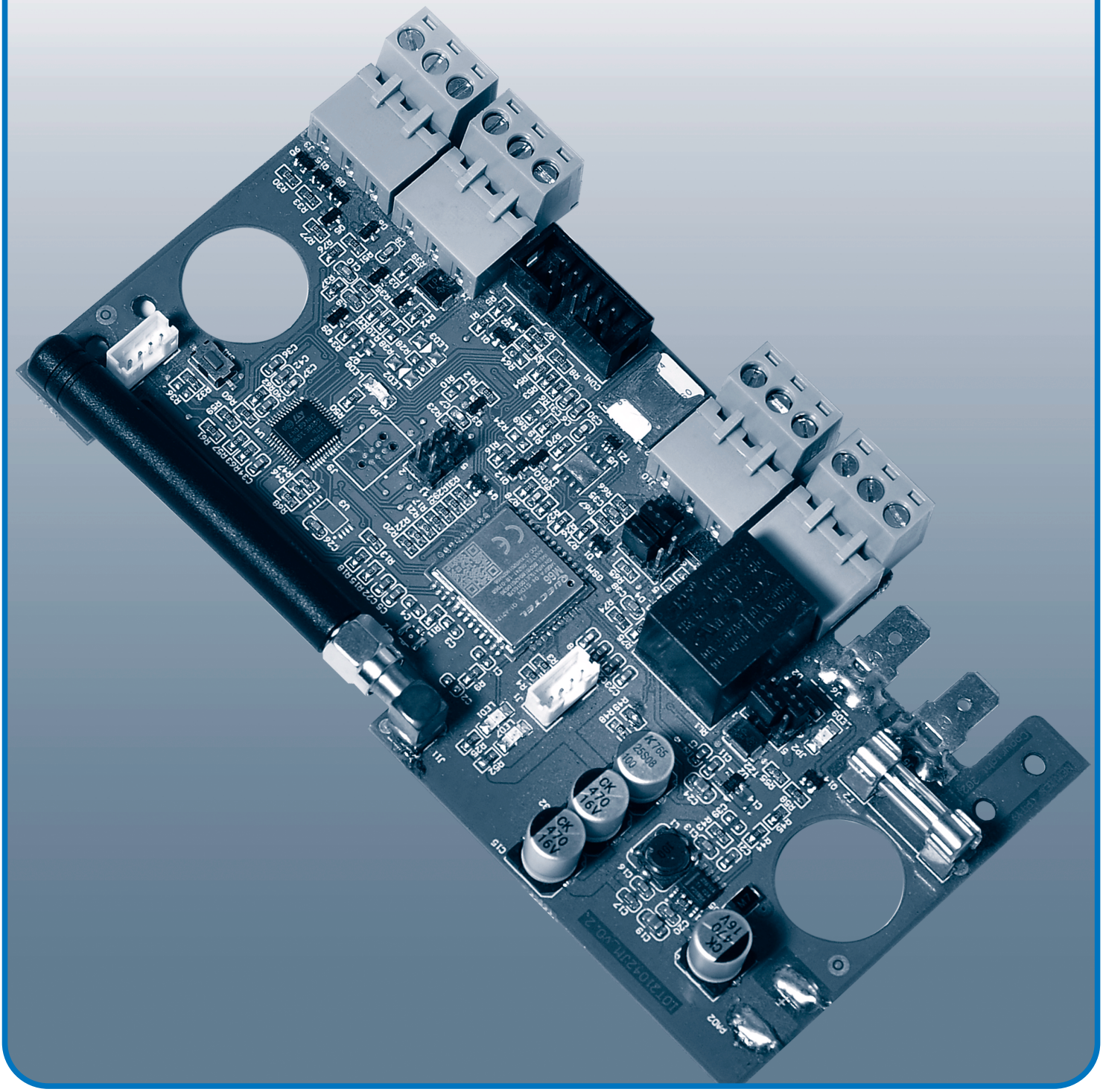

Foreword

Thank you for choosing our product. The **Nemtek Connect Device Gateway 2G** is designed and manufactured to provide many years of reliable use, if installed and maintained correctly. The guidelines provided in this manual will assist you with the basic operation and maintenance of your unit. Currently this product is designed and manufactured in South Africa for South African and international markets. More information on our products and general information is available on our website at: **http://www.nemtek.com**

The **Nemtek Connect Device Gateway 2G** provides connectivity to your supported NEMTEK devices by allowing for connectivity to the **Nemtek Connect** platform. Together with the **Nemtek Connect App**, you can remotely monitor and control your NEMTEK devices, as well as receive notifications and alerts.

Supported Nemtek Devices

The **Nemtek Connect DG** works with the following Nemtek products:

- **Wizord 2i**
- **Wizord 4i**
- **Merlin 4**
- **Druid 13, 15, 18**
- **Druid 114**
- **Druid 25, 28**

Note: This list may be changed without prior notice.
Please see the hardware installation section for more details on how to set up your specific device.

Hardware Overview

The **Nemtek Connect DG** features:

- **2G GSM GPRS Modem**
- **Nano SIM Card slot**
- **SMA (Female) Connector, supports many SMA (Male) GSM Antennas**
- **D2x comms support for Nemtek Druid D2x range**
- **Keypad bus support for Nemtek Druid D1x, Merlin and Merlin Stealth ranges**
- **IO support for Nemtek Wizord Range**

Board Connections

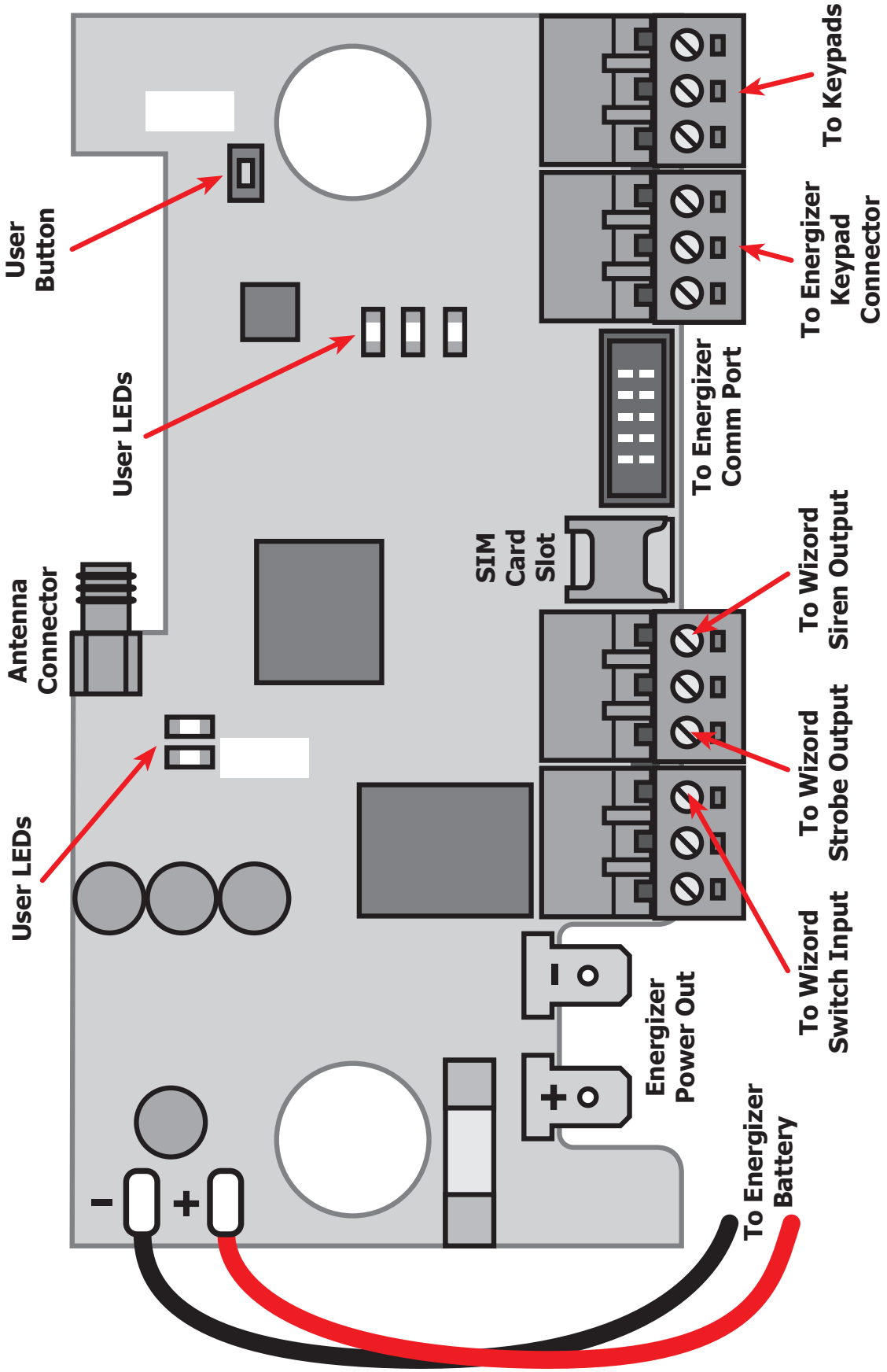

Hardware Installation

- The **Nemtek Connect DG** has been designed to be installed onto the battery brace inside of the enclosure of a supported NEMTEK energizer.

- To install the DG, unplug the energizer from mains and disconnect the energizer's battery leads from the battery. You may need to remove the battery brace to get better access to the battery terminals to remove and plug in the cables onto the battery terminals.

- Plug the energizer battery leads directly into the **Battery Power Out** terminals of the DG board. Be careful to ensure you connect the correct polarity wires to the correct terminal. Make sure the terminal connectors are plugged in completely and firmly onto the battery terminals on the board.

- Connect the furthest away battery wire to the battery. This is usually the negative terminal and wire, unless the battery is orientated differently. Take care to ensure you connect the correct polarity wires to the correct battery terminals. Do not connect the second wire yet, as this will apply power to both the DG and energizer.

- Make sure the battery is firmly in place and screw the battery brace back over the battery. Be sure that no wires or obstacles are between the battery brace and the battery and that the battery brace goes over the battery without any force, otherwise this may cause a crack in the battery which could cause a leak of battery acid.

- Align and screw in the DG board on the battery brace. Two screws are supplied for this purpose.

- Screw in the antenna. If your antenna has a lead, make sure it is routed outside of the enclosure via the appropriate cable management ports, be careful to not get the cable caught on the enclosure edge when screwing the lid back on.

- Connect up the DG to your energizer as is necessary (see following section for details for each of the supported Nemtek products).

- Once everything is wired up and setup, plug in the second lead to the battery to power up the system. Screw the lid of the enclosure back into place and plug the energizer back into the mains. Reconnect the mains supply.

Connecting to Supported Nemtek Products

Connecting to a Wizord Energizer

Both Nemtek Wizord 2i and Wizord 4i Energizers are supported by the **Nemtek Connect DG**. Update the Wizord energizer's jumper configuration. Make sure all the jumpers **JP1**, **JP2** and **JP3** are all inserted and set **JP2** and **JP3** on the **Nemtek Connect DG** as indicated in the diagram below. In this mode, the state of the Wizord energizer is controlled by the **Switch Input**, the state of the energizer is indicated on the **Strobe Output** and the alarm is indicated on the **Alarm Output**.

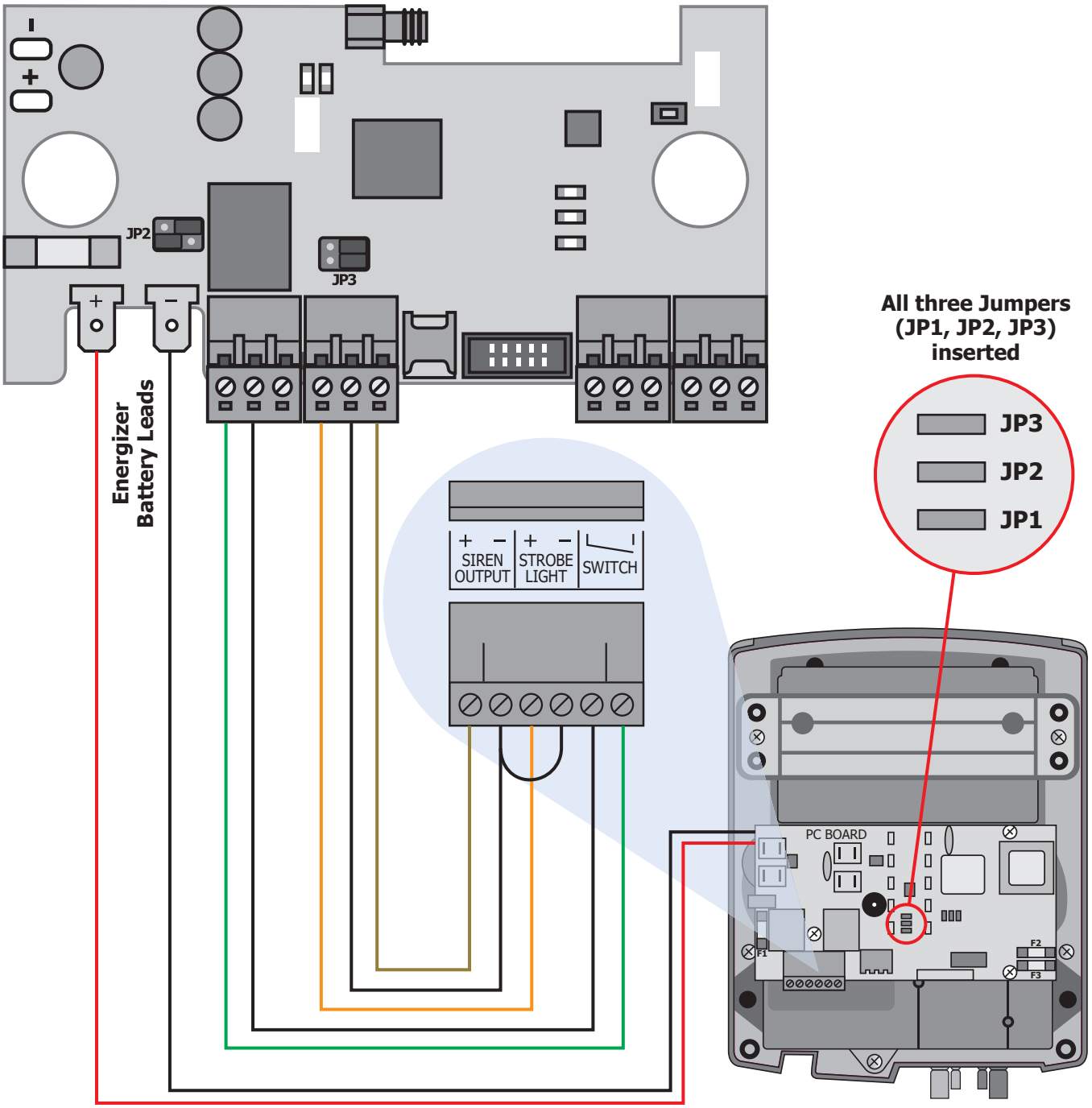

Connecting to Supported Nemtek Products

Connecting to a Keypad Energizer

- The following Nemtek energizers are supported by the **Nemtek Connect DG** over the Keypad Bus: Merlin 4; Druid 13, 15, 18, 114
- To setup the keypad interface, connect a comms cable to the keypad connector of the energizer to the **Keypad IN** connector of the DG. Next connect any external keypads, if you have any, to the **Keypad OUT** connector on the DG.
- When using the DG with the keypad bus connection, you can still use the Nemtek keypads to monitor and control your energizer.

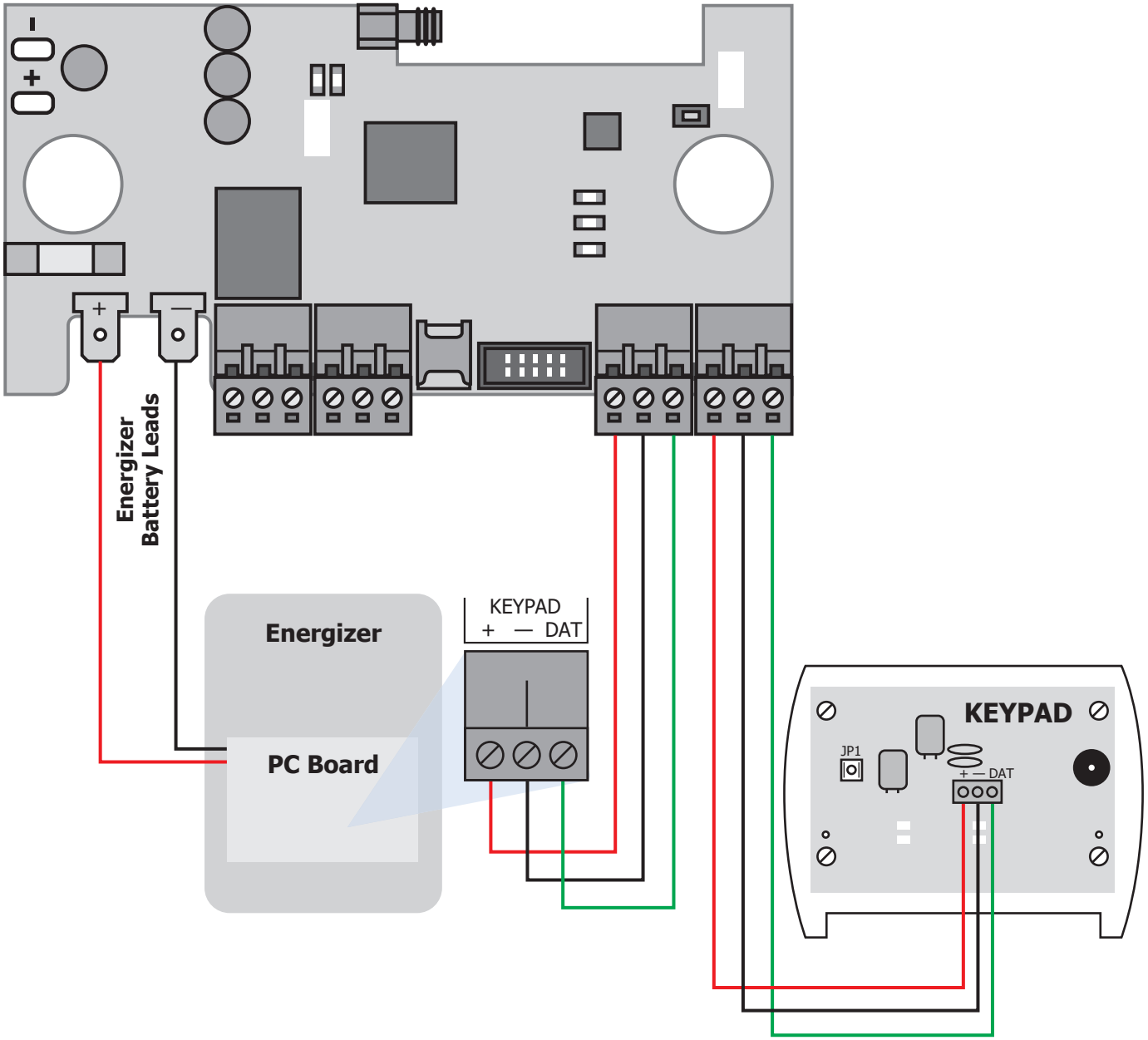

Connecting to Supported Nemtek Products

Connecting to a Druid D2x Energizer

- The Druid D2x (D25 and D28) is connected to the **Nemtek Connect DG** via the data ribbon cable included.
- Connect the ribbon to the relevant connectors on the DG and the energizer.
- Set the energizer up to network address number 1 using the keypad. This is done by entering programming mode (**INSTALLER_PIN*0#**) and the address change command (**5101*#**), then exit programming mode (***#**).

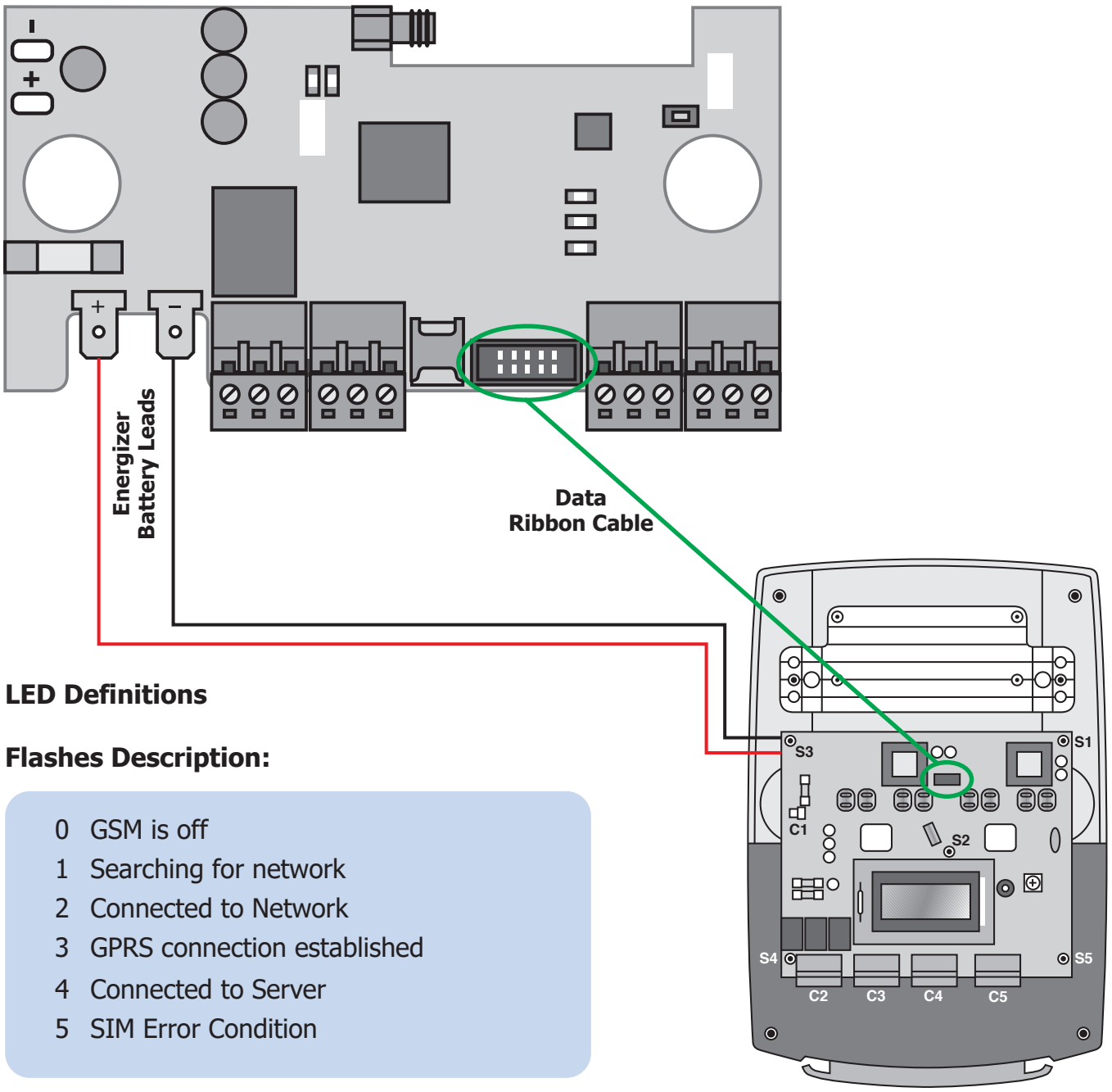

LED Definitions

Flashes Description:

0 GSM is off
1 Searching for network
2 Connected to Network
3 GPRS connection established
4 Connected to Server
5 SIM Error Condition

GUARANTEE & DISCLAIMER

The NEMTEK Connect DGM, manufactured by NEMTEK (Pty) Ltd, is guaranteed for a period of two years from date of sale against defects due to faulty workmanship or materials. NEMTEK will, at its discretion, either repair or replace a product that proves to be defective. NEMTEK guarantees that the product, when properly installed and used in line with the specification as determined by NEMTEK from time to time, will execute its function of generating a suitable potential.

NEMTEK (Pty) Ltd does not guarantee that the operation of the product will be uninterrupted and totally error free. Faulty units must be returned to one of the NEMTEK Group outlets. The buyer shall pay all shipping and other charges for the return of the product to NEMTEK or NEMTEK Security Warehouse. Specifications may be altered without prior notification.

LIMITATION OF GUARANTEE

The guarantee does not apply to defects resulting from acts of God, modifications made by the buyer or any third party, misuse, neglect, abuse, accident or mishandling.

EXCLUSIVE REMEDIES

The remedies provided herein are NEMTEK (Pty) Ltd's sole liability and the buyer's sole and exclusive remedies for breach of warranty. NEMTEK shall not be liable for any special, incidental, consequential, direct or indirect damages, whether based on contract, tort, or any other legal theory. The foregoing guarantee is in lieu of any and all other guarantees, whether expressed, implied, or statutory, including but not limited to guarantees of merchantability and suitability for a particular purpose.

COMPANY PROFILE

The NEMTEK Group of Companies manufacture and distribute intelligent electronic agricultural fencing systems, security and perimeter control systems and have been involved in the security industry since 1990. We have our own research and development team, designing and manufacturing a full range of globally competitive electric fence energizers and related products. NEMTEK is continually updating its products according to South African and international standards in order to ensure the highest quality products and continuous customer satisfaction.

NEMTEK
Electric Fencing Products

CDG 10/22 Rev.1.0