MotionCam User Manual

Updated March 16, 2022

MotionCam is a wireless motion detector with visual alarm verification for indoor use. It operates for up to 4 years on bundled batteries, detects movement at up to 12 meters, ignores animals, but recognizes a human move instantly. MotionCam works within Ajax security systems, connecting to a hub through the two secure radio protocols. The detector uses **Jeweller** to transmit alarms and events, and Wings to transmit photos. Wireless coverage may reach up 1,700 m line-of-sight.

> A hub is required for the detector to operate.
>
> List of compatible hubs and range extenders

The detector is configured via iOS, Android, macOS, and Windows-based **Ajax apps**. Users are alerted of all alarms and events via push notifications, SMS, and calls (if enabled).

The Ajax security system can be used for self-reliant monitoring, or can be connected to a security company's central monitoring station.

Buy MotionCam motion detector featuring visual alarm verification

Functional Elements

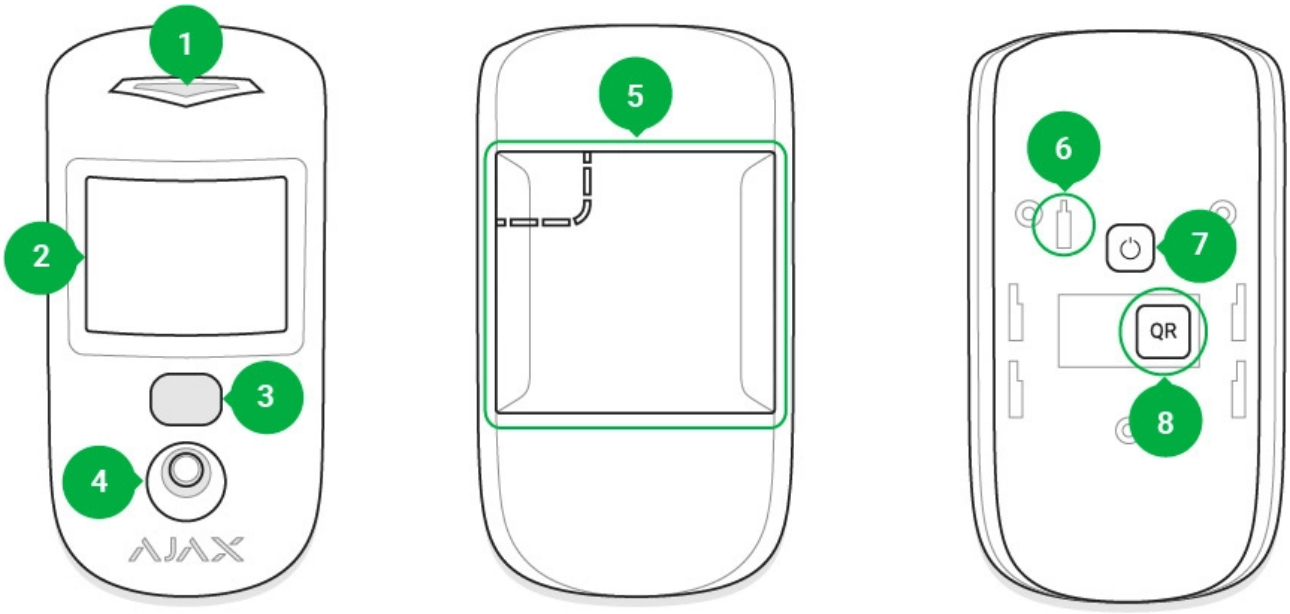

1. LED indicator.
2. Motion detector lens.
3. Infrared backlight. Used to take photos in dark and low-light conditions.
4. Camera.
5. SmartBracket mounting panel. To remove the panel, slide it down. Perforated part of the mounting panel. Necessary for tamper activation in case of an attempt to detach the detector from the surface. Do not break it off!
6. **Tamper button**. Triggers when an attempt is made to detach the detector from the surface or remove it from the mounting panel.
7. Power button of the detector.
8. Detector QR code. Used to connect to the Ajax security system.

Compatible hubs and range extenders

MotionCam requires a hub to operate. The list of compatible hubs and range extenders is available in the table below:

Hubs	Radio signal range extenders
• Hub 2 (2G) • Hub 2 (4G) • Hub 2 Plus • Hub Hybrid (2G) • Hub Hybrid (4G)	• ReX 2

Connection to other **hubs**, **radio signal range extenders**, **ocBridge Plus**, and **uartBridge** is not provided.

Operating Principle

The infrared sensor of MotionCam detects intrusion into the secured premises by identifying moving objects with a temperature close to that of the human body. The **temperature compensation** function makes the detector effective inside premises with temperature ranging from 0 to +40°C. If placed and adjusted properly, MotionCam ignores pets.

When movement is detected, the armed detector instantly transmits an alarm signal to the hub. The hub activates the connected sirens and notifies the user and the security company. MotionCam uses **Jeweller** radio protocol to transmit alarms and events to the hub.

The built-in MotionCam camera can take from 1 to 5 shots with the resolution of 320×240 and up to 3 shots with the resolution of 640×480 pixels. A series of photos is displayed in the app as an animation, so the user is able to evaluate the unfolding of the event over time. Photos are available both in Ajax apps and on the Central Monitoring Station software of the security company. MotionCam uses Wings radio protocol to transmit photos to the hub.

A version of the detector with Photo on Demand and Photo by Scenario is also available.

In addition to the Photo by Alarm feature, the PhOD version can take photos on user demand at any time and automatically take photos in case of Ajax fire detectors alarm.

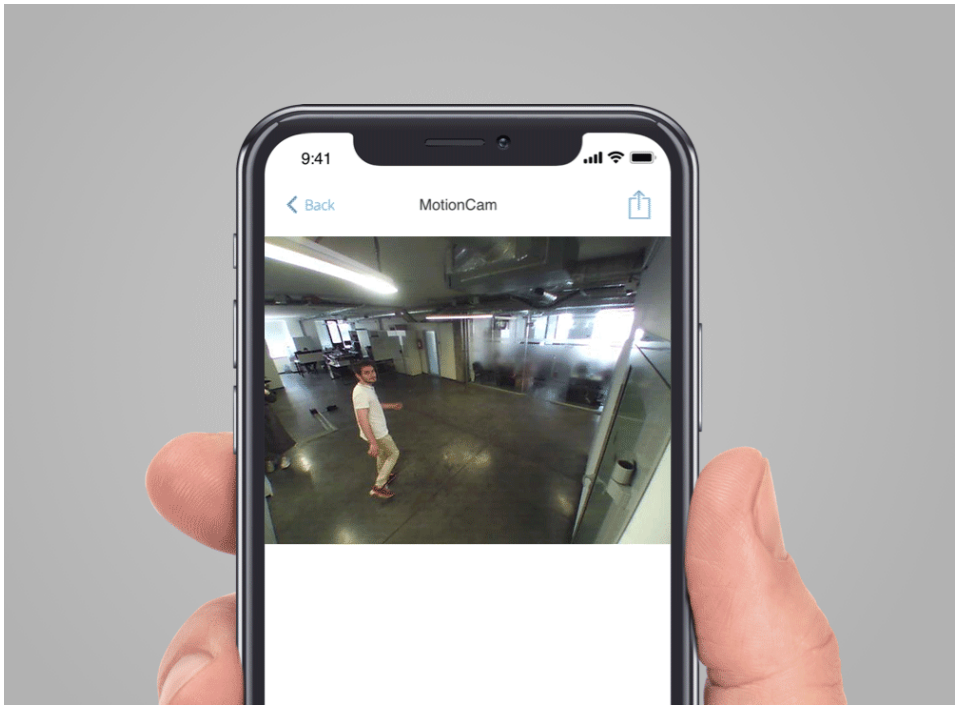

The detector features infrared illumination for shooting in the dark, which is activated only when triggering.

The photo delivery time to Ajax apps depends on the selected resolution, detector connection to the radio signal range extender, Wings signal strength, and the Internet connection speed. The alarm message is transmitted in 0.15 seconds.

Photo resolution	Delivery time	
	When connected directly to the hub*	When connected to the hub via ReX 2**
160 × 120 pixels	up to 7 seconds	up to 9 seconds
320 × 240 pixels (default)	up to 9 seconds	up to 19 seconds
640 × 480 pixels	up to 20 seconds	up to 36 seconds

** The delivery time of one photo when the signal strength between the hub and MotionCam is 2–3 bars and the hub is connected via Ethernet or 4G.*
*** Values were calculated with a signal strength of 3 bars between ReX 2 and the detector or between the hub and ReX 2. The hub works via Ethernet or 4G.*

Pairing the Detector with the hub

Before you start pairing the detector:

1. Turn on the hub and check the Internet connection (via Ethernet cable and/or GSM network).
2. Install the **Ajax app** on your smartphone. Create an account, add the hub to the app, and create at least one room.
3. Check the status of the hub in the app to make sure it is disarmed and is not updating.

> ⚠ Please note that only a user with admin permissions can add devices to the hub.

To connect the detector:

1. In the Ajax mobile app, tap **Add Device**.
2. Name the device, scan or enter manually the QR code (placed on the back of the detector body or its packaging), select the room for placement.
3. Click **Add**. The countdown will start.
4. Turn on the device by holding its power button for 3 seconds. Please note that the hub connection request is only sent for a short time while switching on the device.

> ℹ For detection and pairing to occur, the device must be within a hub's wireless coverage (at the same facility).

MotionCam turns off automatically within 6 seconds after activation if it fails to connect to the hub. There is no need to turn off the device to retry.

If the device has already been paired with another hub, turn MotionCam off, and then follow the standard pairing procedure.

After pairing, the detector will appear on the app's hub device list. The frequency of the device status updates depends on the polling interval indicated in the hub's settings (36 seconds by default).

States

The states display information about the device and its operating parameters. MotionCam states are available in the Ajax apps:

1. Go to the **Devices** menu.
2. Select **MotionCam** from the list.

Parameter	Value
Malfunction	Clicking on (i) opens the MotionCam (PhOD) Jeweller malfunctions list. The field is displayed if a malfunction is detected.
Temperature	Detector temperature. It is measured on the processor and changes gradually. The acceptable measurement error between the value in the app and the ambient temperature is 2°C. The value is updated as soon as the detector identifies a temperature change of at least 1°C.
Jeweller Signal Strength	Signal strength between the hub or range extender and the detector on the Jeweller channel. The recommended value is 2–3 bars. Jeweller is a protocol for transmitting MotionCam (PhOD) Jeweller events and alarms.
Connection via Jeweller	Connection status on the Jeweller channel between the hub or the range extender and the detector: • **Online** — the detector is connected to the hub or the range extender.

	• **Offline** — the detector is not connected to the hub or the range extender.
Wings Signal Strength	Signal strength between the hub or the range extender and the detector on the Wings channel. The recommended value is 2–3 bars. Wings is a protocol for transmitting MotionCam photo verifications.
Connection via Wings	Connection status on the Wings channel between the hub or the range extender and the detector: • **Online** — the detector is connected to the hub or the range extender. • **Offline** — the detector is not connected to the hub or the range extender.
Battery Charge	The battery charge level of the device: • **OK** • **Battery discharged** When the batteries are low, the Ajax apps and the security company will receive appropriate notifications. After sending a low battery notification, the detector can work for up to 2 months. How battery charge is displayed Battery life calculator
Lid	The status of the detector's tamper device that responds to the detachment or opening of the device enclosure: • **Open** — the detector was removed from the SmartBracket or its integrity was compromised. • **Closed** — the detector is installed on the SmartBracket mounting panel. The integrity of the device enclosure and the mounting panel is not compromised. Normal state.

	Learn more
Delay When Entering, sec	Delay time when entering: from 5 to 120 seconds. Delay when entering (alarm activation delay) is the time the user has to disarm the security system after entering the secured area. Learn more
Delay When Leaving, sec	Delay time when leaving: from 5 to 120 seconds. Delay when leaving (arming delay) is the time the user has to leave the secured area after the security system arming. Learn more
Night Mode Delay When Entering, sec	Delay time when entering in the **Night Mode**: from 5 to 120 seconds. Delay when entering (alarm activation delay) is the time the user has to disarm the security system after entering the premises. Learn more
Night Mode Delay When Leaving, sec	Delay time when leaving in the **Night Mode**: from 5 to 120 seconds. Delay when leaving (arming delay) is the time the user has to leave the premises after the security system arming. Learn more
Sensitivity	Sensitivity level of the motion detector: • **Low** — it does not respond to animals up to 50 cm tall. • **Normal** (by default) — it does not respond to small dogs (up to 35 cm tall).

	• **High** — the detector does not respond to cats (up to 25 cm tall).
Always Active	When this option is enabled, the detector is constantly armed, detects motion, and raises alarms. Learn more
Temporary Deactivation	Shows the status of the device temporary deactivation function: • **No** — the device operates normally and transmits all events. • **Lid only** — the hub administrator has disabled notifications about triggering on the device body. • **Entirely** — the device is completely excluded from the system operation by the hub administrator. The device does not follow system commands and does not report alarms or other events. • **By number of alarms** — the device is automatically disabled when the number of alarms is exceeded (specified in the settings for Devices Auto Deactivation). Learn more
Firmware	Detector firmware version.
Device ID	Detector ID. Also available on the QR code on the detector enclosure and its package box.
Device №	Number of the device loop (zone).

Settings

To change the MotionCam detector settings in the Ajax app:

1. Go to the **Devices** menu.
2. Select **MotionCam** from the list.

3. Go to **Settings** by clicking on the gear icon.

4. Set the required parameters.

5. Click **Back** to save the new settings.

Settings	Value
First field	Detector name. Displayed in the list of hub devices, SMS text, and notifications in the event feed. To change the detector name, click on the pencil icon. The name can contain up to 12 Cyrillic characters or up to 24 Latin characters.
Room	Selecting the virtual room to which the MotionCam is assigned. The name of the room is displayed in the SMS text and notifications in the event feed.
Delay When Entering, sec	Delay time when entering: from 5 to 120 seconds. Delay when entering (alarm activation delay) is the time the user has to disarm the security system after entering the secured area. Learn more
Delay When Leaving, sec	Delay time when leaving: from 5 to 120 seconds. Delay when leaving (arming delay) is the time the user has to leave the secured area after the security system arming. Learn more
Arm in Night Mode	If this option is enabled, the detector will go into the armed mode when the system is set to the **Night Mode**. Learn more

Night Mode Delay When Entering, sec	Delay time when entering in the **Night Mode**: from 5 to 120 seconds. Delay when entering (alarm activation delay) is the time the user has to disarm the security system after entering the premises. Learn more
Night Mode Delay When Leaving, sec	Delay time when leaving in the **Night Mode**: from 5 to 120 seconds. Delay when leaving (arming delay) is the time the user has to leave the premises after the security system arming. Learn more
Alarm LED indication	When the option is disabled, the LED indicator of the detector doesn't notify about alarms or tamper triggering.
Sensitivity	Sensitivity level of the motion detector. The choice depends on the type of the object, the presence of probable sources of false alarms, and the specifics of the secured area: • **Low** — it does not respond to animals up to 50 cm tall. • **Normal** (by default) — it does not respond to small dogs (up to 35 cm tall). • **High** — the detector does not respond to cats (up to 25 cm tall). Why motion detectors react to animals and how to avoid this
Image resolution	MotionCam takes photos with the following resolutions: • 160 × 120 • 320 × 240 (default) • 640 × 480

	The higher the resolution, the more detailed the image is, but it takes longer to transmit the photos to the hub.
Photo by Alarm	Selecting the number of photos in case of an alarm: • No photo • 1 photo • Series of 2 • Series of 3 • Series of 4 (only available with 320 × 240 or 160 × 120 resolutions) • Series of 5 (only available with 320 × 240 or 160 × 120 resolutions)
Alarms with photo verification	Selecting the number of alarms accompanied by photos. You can specify 1 to 10 alarms or set up the transmission of a photo each time the device is triggered. An alarm counter with photo verification is reset when the security system is disarmed and re-armed. The setting is available if the **Always active** option is disabled. When the detector is in the **Always active** mode, it will transmit a photo every time it is triggered.
Always Active	When this option is enabled, the detector is always in the armed mode and detects motion. Learn more
Alert with a siren if motion detected	When this option is enabled, the sirens **added to the system** are activated when motion is detected by the MotionCam.
Jeweller Signal Strength Test	Switches the detector to the Jeweller signal strength test mode.

	The test allows you to check the signal strength between the hub or the range extender and the detector via the Jeweller wireless data transfer protocol to determine the optimal installation location. **Learn more**
Wings Signal Strength Test	Switches the detector to the Wings signal strength test mode. The test allows you to check the signal strength between the hub or the range extender and the detector via the Wings wireless data transfer protocol to determine the optimal installation location. **Learn more**
Detection zone test	Switches the detector to the detection zone test mode. The test enables users to check how the detector responds to movement and determine the optimal installation location. **Learn more**
Signal Attenuation Test	Switches the detector to the signal attenuation test mode. During the test, the transmitter power is decreased or increased to simulate a change in the environment to test the stability of communication between the detector and the hub. **Learn more**
User Guide	Opens the MotionCam User Manual in the Ajax app.
Temporary Deactivation	Allows the user to disable the device without removing it from the system. Two options are available: • **No**.

	• **Entirely** — the device does not execute system commands and does not participate in automation scenarios, and the system ignores alarms and other device notifications. • **Lid only** — the system ignores the detector tamper triggering notifications. **Learn more about temporary deactivation** The system can also automatically deactivate devices when the preset number of alarms is exceeded. **Learn more about auto deactivation**
Unpair Device	Unpairs the detector, disconnects it from the hub, and deletes its settings.

Photo Verification of Alarms in Ajax apps

If the **Send photo in case of alarm** option is enabled in the MotionCam settings, detector alarms will be accompanied by photos or animations in Ajax apps.

To view photos, click on the alert notification in the events feed.

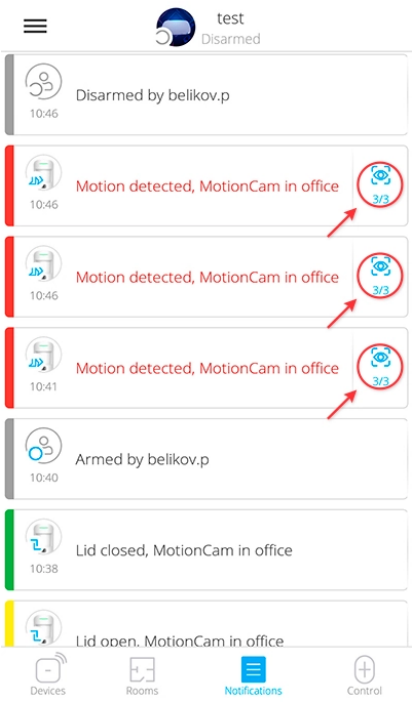

To save the photo, click on the appropriate button.

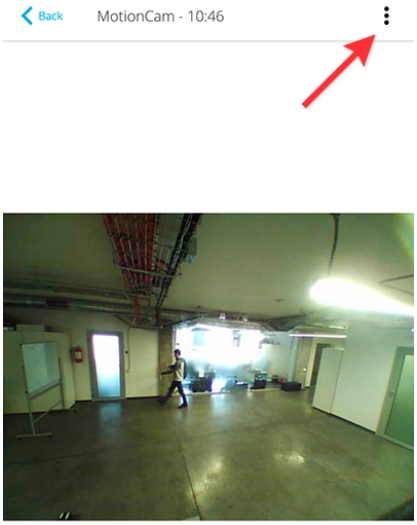

A series of photos is displayed in the app as an animation, so the user is able to evaluate the unfolding of the event over time.

Each frame of a series of photos can be saved individually. The entire series can be saved at once or MP4 video.

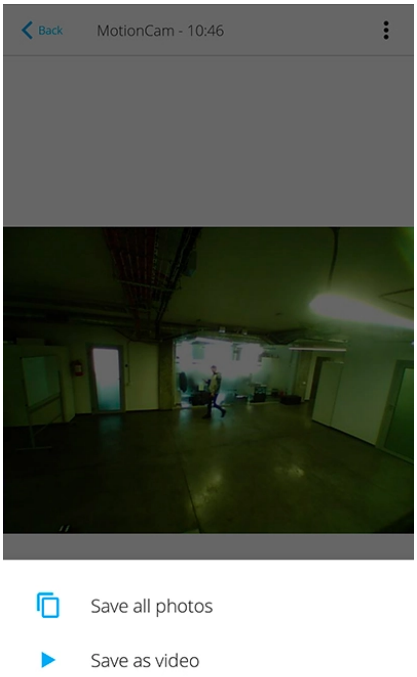

Features of alarm photo verification by MotionCam detectors

Indication

The MotionCam LED indicator may turn red or green, depending on the status of the device.

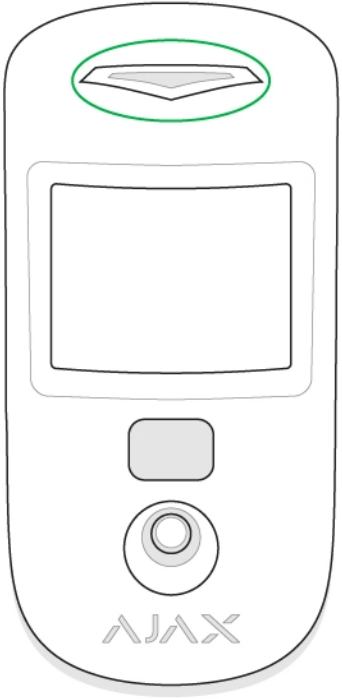

Indication when pressing the power button

Event	Indication
Turning on	Lights up green while the device is turning on
Turning off	Lights up red, then flashes three times

Active detector indication

Event	Indication	Note
Connecting the detector to the hub	Lights up green for a few seconds	
Hardware error	Flashes red	The detector needs to be repaired, please **contact Support Service**
Alarm or tamper activation	Lights up green for about 1 second	
Battery replacement needed	Slowly lights up/goes out green when an alarm is raised	For battery replacement procedure, see **Battery Replacement** manual

Functionality Testing

Ajax security systems can run tests to verify the functionality of connected devices.

The tests do not start immediately but within 36 s under default settings. The test start delay depends on the detector polling period settings (see **Jeweller** settings section in hub settings).

The tests are available in the detector settings menu (**Ajax application** → **Devices** → **MotionCam** → **Settings**) :

- Jeweller Signal Strength Test
- Wings Signal Strength Test
- Detection Zone Test
- Attenuation Test

If any interference is detected or the signal strength is too low to transmit images, the user will receive a push notification **"High interference at Wings frequencies"**.

Detector Placement

The location of the detector directly affects the efficiency of the security system. The location of the MotionCam detector is determined by its distance from the hub and presence of any obstacles between the devices hindering the radio signal transmission: walls, intermediate floors, or large-size objects located in the room.

> The device developed only for indoor use.

Choosing a location to install, consider the orientation of the lens, the viewing angles of the detector and the camera, and the presence of obstacles that obstruct the view. It is recommended to aim the detector lens perpendicular to the intended path of intrusion into the room. Make sure that furniture, house plants, vases, decorative or glass elements do not obstruct the field of view of the detector.

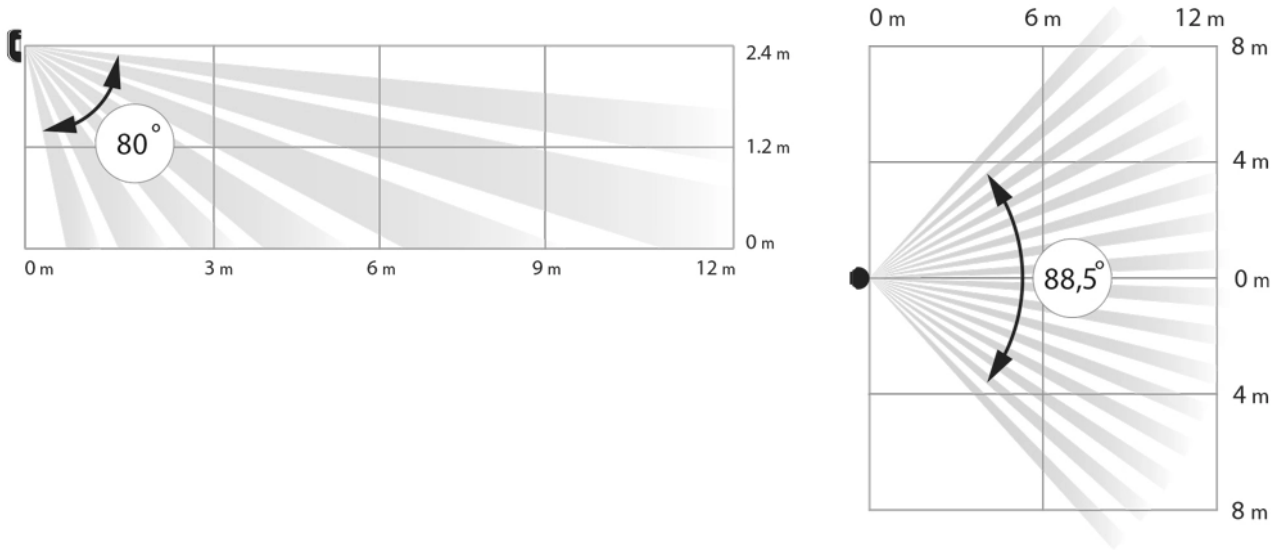

Horizontal and vertical viewing angles of the detector

The detector does not detect movement behind the glass. Therefore, do not install it in locations where glass objects can obstruct its field of view. For example, in places where an open window can obstruct the field of view of the detector.

> Remember to check the signal strength at the installation site. If the signal strength is low (a single bar), we do not guarantee a stable operation of the security system!

If the detector has low signal strength, take whatever action is possible to improve the quality of communication! At a minimum, relocate the device: repositioning by even 20 cm can significantly improve the reception quality.

Detector Installation

> Before installing the detector, make sure that you have chosen an appropriate location as indicated in this manual.

The recommended height of the installation is 2.4 m. If the detector is not installed at the recommended height, this will reduce the area of the motion detection zone and disrupt the operation of the pet immunity function.

Why motion detectors react to animals and how to avoid it

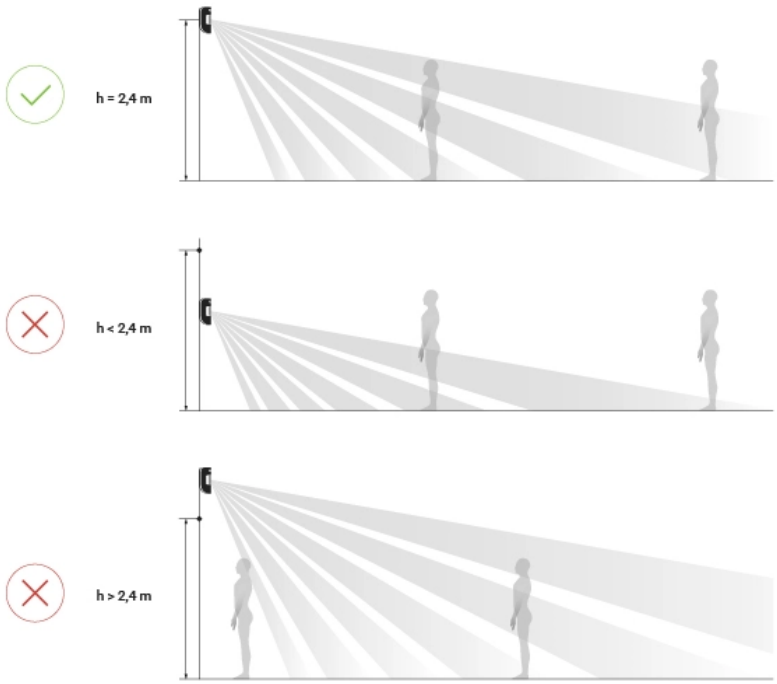

Use the SmartBracket mounting panel to mount the MotionCam detector on a vertical surface or in a corner. SmartBracket has special recesses for fixing it with the bundled screws.

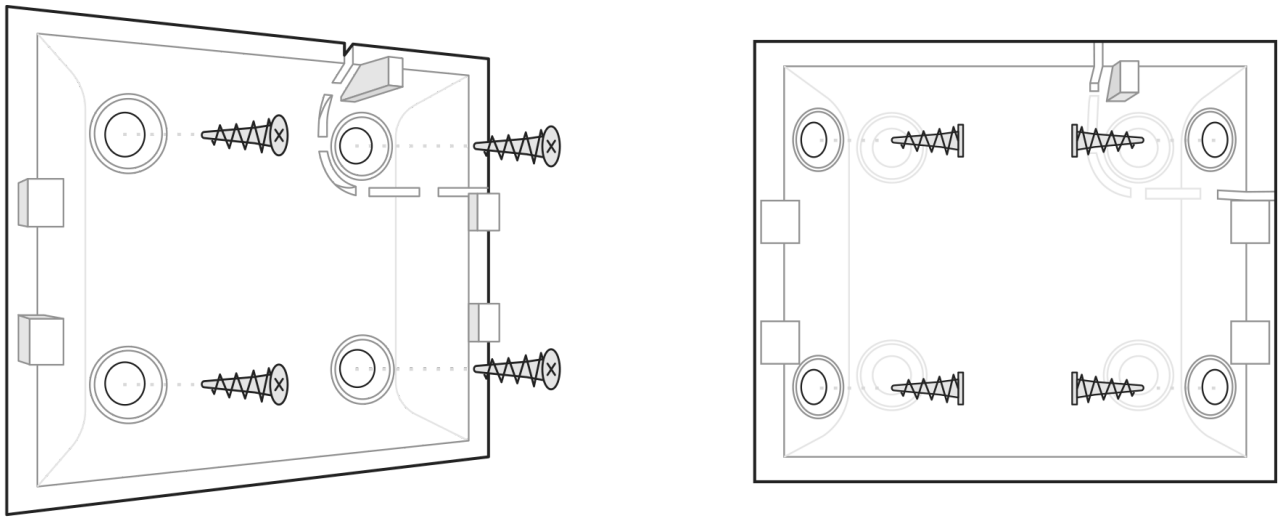

To install the detector:

1. Attach the SmartBracket panel to the surface with bundled screws, using at least two fixing points. To make sure that tamper reacts to an attempt to dismantle the device, fix the perforated corner of the SmartBracket:

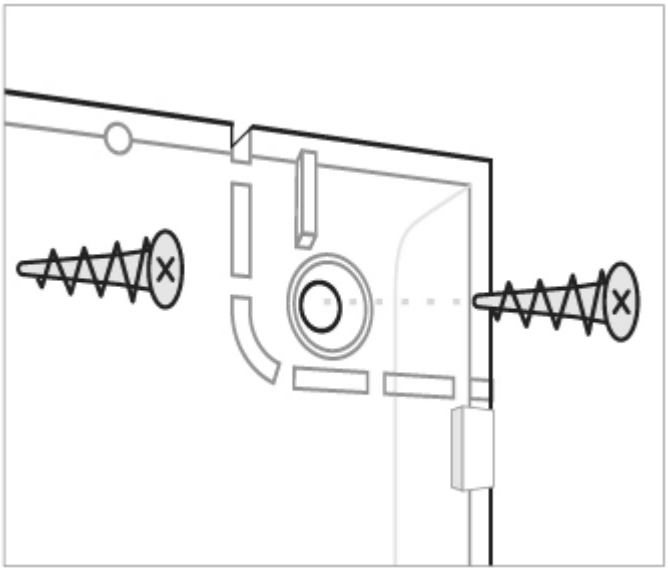

> Double-sided adhesive tape should be used only for the temporary installation of the detector. The tape dries up over time, which may result in the falling of the detector and triggering of the security system. Moreover, the device may fail if hit.

2. Attach the detector to the mounting panel. As soon the detector is fixed in SmartBracket, its LED blinks once to signal that the tamper on the detector has been triggered.

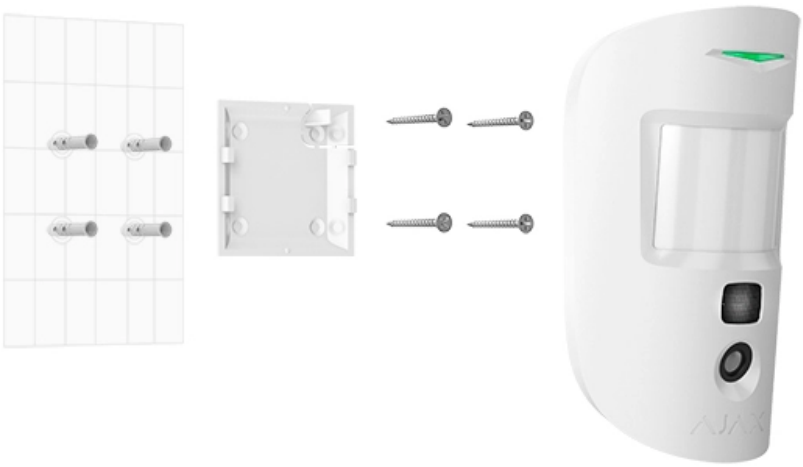

If the detector's LED doesn't light up after the device is attached to the SmartBracket, check the tamper status in the Ajax app and then check if it fits tightly onto the attachment panel.

Do not install the detector:

- outdoors;
- facing the window to avoid exposing the detector lens to direct sunlight;
- opposite any objects with the rapidly change temperature (e.g. opposite electric or gas heaters);
- opposite any moving objects with the temperature close to that of the human body (opposite swaying curtains above the heater);
- in places with fast air circulation (next to fans, open windows or doors);
- near metal objects and mirrors that cause the attenuation or interfere with radio signals;
- inside rooms with temperature and humidity beyond the permissible limits;
- closer than 1 meter to a hub.

Maintenance

Check the operability of the detector on a regular basis. Clean the detector body from dust, cobwebs, and other contaminants as they emerge. Use a soft dry cloth suitable for equipment care.

Do not use substances that contain alcohol, acetone, gasoline or other active solvents to clean the detector. Wipe the lens very carefully — any scratches on the plastic may impair the detector sensitivity.

The pre-installed battery ensures up to 4 years of autonomous operation. If the detector battery is nearly depleted, the security system will send a notification, and the LED will smoothly light up and go out when the detector detects any motion or if the tamper is activated.

What is the MotionCam battery life and what does affect it

Battery Replacement

Technical Specifications

Sensitive element	PIR sensor
Motion detection range	Up to 12 m
Motion detector viewing angle (H/V)	88.5°/80°
Time for motion detection	From 0.3 to 2 m/s
Image resolution	Up to 640 × 480 pixels
Number of photos taken when alarm is raised	Up to 5 photos/single alarm
Infrared illumination for shooting in the dark	Yes
Pet immunity	Weight up to 20 kg, height up to 50 cm Why motion detectors react to animals and how to avoid it >
Tamper protection	Yes
Radio communication protocols with Ajax detectors and devices	**Jeweller** — for transmitting events and alarms. Learn more **Wings** — for transmitting photos. Learn more
Radio frequency band	866.0 – 866.5 MHz 868.0 – 868.6 MHz 868.7 – 869.2 MHz 905.0 – 926.5 MHz 915.85 – 926.5 MHz 921.0 – 922.0 MHz Depends on the region of sale.
Compatibility with hubs	• Hub 2 (2G) • Hub 2 (4G) • Hub 2 Plus • Hub Hybrid (2G) • Hub Hybrid (4G)
Compatibility with radio signal range extenders	ReX 2

CMS compatibility	Motion alarms are transmitted to CMSs that support SIA (DC-09) and Contact ID protocols. CMS software supporting visual alarms verification
Maximum RF output power	Up to 20 mW
Radio signal modulation	GFSK
Radio signal range (line-of-sight)	Up to 1,700 m Learn more
Power supply	2 CR123A batteries, 3 V
Battery life	Up to 4 years
Installation	Indoors
Operating temperature range	From 0°C to +40°C (manufacture date up to June 1, 2020) From -10°C to +40°C (manufacture date from June 1, 2020) How to find the manufacture date of a detector or device
Operating humidity	Up to 75%
Overall dimensions	135 × 70 × 60 mm
Weight	167 g
Service life	10 years

Compliance with standards

Complete Set

1. MotionCam
2. SmartBracket mounting panel
3. 2 CR123A batteries (pre-installed)

4. Installation kit

5. Quick Start Guide

Warranty

Warranty for the AJAX SYSTEMS MANUFACTURING Limited Liability Company products is valid for 2 years after the purchase and does not extend to the bundled battery.

If the device does not function correctly, please contact the Support Service first. In half of the cases, technical issues can be solved remotely!

Warranty Obligations

User Agreement

Technical support: **support@ajax.systems**

Subscribe to the newsletter about safe life. No spam

Email

Subscribe