GARAGE DOOR OPERATORS

# SDO4 SMART INSTALLATION MANUAL

SDO4
SMART

Centurion Systems (Pty) Ltd
www.centsys.com

CENTURION

# Company Profile

1986 1990 1995 1999 Today

**In-house R&D development team**

**Manufactures to international quality standard ISO 9001:2015**

**After-sales multi-language Technical Support**

**100% testing of products**

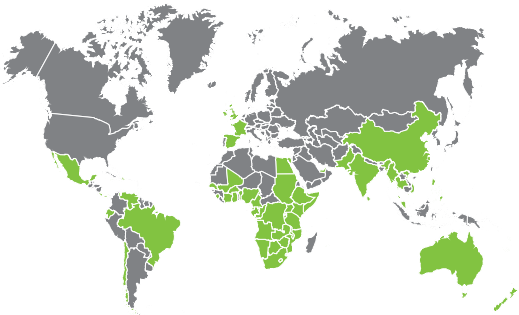

**Sales and technical support to Africa, Europe, Asia, the Americas, Australia and the Pacific**

**Call Centre Operating Times**

**Monday to Friday**
07h00 to 18h00 GMT+2,

**Saturdays**
08h00 to 16h30 GMT+2

**Centurion Systems (Pty) Ltd** reserves the right to make changes to the product described in this manual without notice and without obligation to notify any persons of any such revisions or changes. Additionally, **Centurion Systems (Pty) Ltd** makes no representations or warranties with respect to this manual. No part of this document may be copied, stored in a retrieval system or transmitted in any form or by any means electronic, mechanical, optical or photographic, without the express prior written consent of **Centurion Systems (Pty) Ltd.**

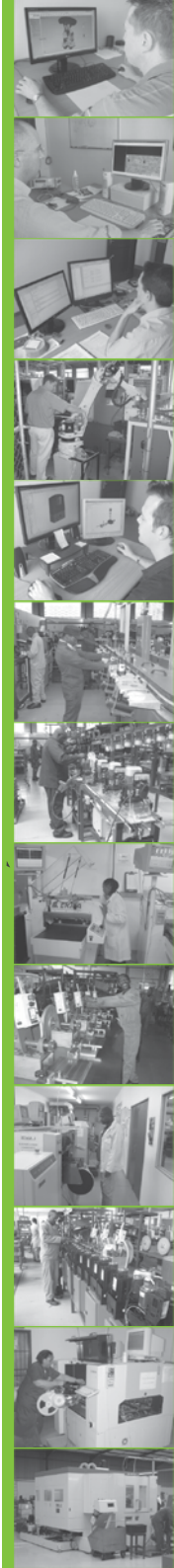

# Contents


| | | |
|---|---|---|
| **1.** | **INTRODUCTION** | **Page 5** |
| **1.1.** | **Important Safety Information** | **Page 6** |
| **2.** | **SPECIFICATIONS** | **Page 9** |
| **2.1.** | **Physical Dimensions** | **Page 9** |
| **2.2.** | **Technical Specifications** | **Page 10** |
| **3.** | **PRODUCT IDENTIFICATION** | **Page 11** |
| **3.1.** | **Fasteners List and Spares** | **Page 12** |
| **4.** | **REQUIRED TOOLS AND EQUIPMENT** | **Page 12** |
| **5.** | **PREPARATION OF SITE** | **Page 13** |
| **6.** | **OPERATOR INSTALLATION** | **Page 14** |
| **6.1.** | **Assembly Instructions** | **Page 14** |
| **6.2.** | **Installation Instructions** | **Page 14** |
| 6.2.1. | Sectional Doors | Page 17 |
| 6.2.2. | Tip-up Doors | Page 29 |
| **6.3.** | **Engaging and Disengaging the Operator** | **Page 41** |
| **6.4.** | **Emergency Lock functionality** | **Page 41** |
| **6.5.** | **Positioning the Opening and Closing Limit Stoppers** | **Page 42** |
| **6.6.** | **The Wireless Wall Switch** | **Page 43** |
| **6.7.** | **Safety Beams** | **Page 44** |
| **6.8.** | **Connecting to a Power Supply** | **Page 44** |
| **7.** | **ELECTRICAL SETUP OF ACCESSORIES** | **Page 45** |
| **7.1.** | **Wiring Safety Beams / Photocells** | **Page 45** |
| **7.2.** | **Wiring External Radio Receivers** | **Page 46** |
| **8.** | **COMMISSIONING THE SYSTEM** | **Page 47** |
| **9.** | **INSTALLATION HANDOVER** | **Page 48** |
| **10.** | **24 MONTH PRODUCT WARRANTY** | **Page 49** |

## Icons used in this manual

This icon indicates tips and other information that could be useful during the installation.

This icon denotes variations and other aspects that should be considered during installation.

**This icon indicates warning, caution or attention! Please take special note of critical aspects that MUST be adhered to in order to prevent injury.**

# 1. Introduction

The **SDO4 SMART** has been designed to automate domestic garage doors safely, quietly and reliably. The product's belt-driven system allows for whisper-quiet operation, while reliable battery backup ensures that the **SDO4 SMART** will continue working even during lengthy power outages.

In addition, the **SDO4 SMART's** built-in collision sensing circuitry makes it a very safe automation solution. Kits are available for both sectional and tip-up garage doors.

**Advanced features of the SDO4 SMART logic controller include:**

- Interactive graphic user interface via a smartphone application
- Automated setup of garage door endpoints (limits)
- Independently-adjustable motor speed in both opening and closing directions[1]
- Fail-safe collision detection and auto reverse (adjustable sensitivity)
- Smooth, adjustable short and long stop
- Multiple operational modes
- Selectable, adjustable Autoclose
- Independent safety input for opening and closing beams
- Onboard NOVA code-hopping radio receiver with full channel-mapping capability (limited to 20 4-button remotes)

1. Tip-up Doors Only

## 1.1. Important Safety Information

### WARNING! IMPORTANT SAFETY INSTRUCTIONS

**To ensure the safety of people and possessions, it is important that you read all the following instructions.**

**Follow all instructions since incorrect installation can lead to severe injury. Incorrect installation or incorrect use of the product could cause serious harm to people and / or property.**

**The installer, being either professional or DIY, is the last person on the site who can ensure that the operator is safely installed, and that the whole system can be operated safely.**

## Warnings for the installer

**CAREFULLY READ AND FOLLOW ALL INSTRUCTIONS before beginning to install the product.**

- The installation of your new **SDO4 SMART** must be carried out by a technically qualified or licensed person. Attempting to install or repair the **SDO4 SMART** without suitable technical qualification may result in severe personal injury, death and / or property damage
- Before installing the drive, check that the door is in good mechanical condition, correctly balanced and opens and closes properly. The **SDO4 SMART** must only be installed on a properly-balanced, well-functioning garage door. The garage door is deemed to be well-balanced and aligned if it:
  - Requires an equivalent amount of applied force to either manually open or close. The applied force should not exceed 100N (10kg)
  - Does not rise or fall more than 100mm when released at any point between the fully open and fully closed positions
  - Does not rub on or incorrectly make contact with any supporting or surrounding structures
  - The horizontal tracks have been installed level, and
  - The door panels have been installed level, and
  - The vertical tracks have been installed plumb, and
  - The junction between the curved horizontal track and the vertical track does not cause the door to ‘jump’
- The counterbalance springs on sectional type garage doors must be properly lubricated between all of the coils with heavy automotive bearing grease
- Failure to adequately lubricate the springs may result in one or more of the following:
  - Counterbalance springs may become rusty over time, resulting in additional operating friction between the coils which may cause the **SDO4 SMART** to malfunction
  - Seasonal temperature changes may cause the garage door springs to expand and / or contract. The resultant increase and / or decrease in operating friction may cause the **SDO4 SMART** to malfunction. Properly lubricating the springs will help to minimise changes in operating friction due to the effects of seasonal temperature change

- Repairs to the garage door must be carried out by technically qualified persons. Attempting to repair the garage door without suitable technical qualification may result in severe personal injury, death and / or property damage
- Where possible, install the **SDO4 SMART** at least two meters or more above the ground. Adjust the engage / disengage cord so that it hangs approximately 1.8 meters from the ground
- The header bracket carries ALL of the opening and closing thrust of the **SDO4 SMART** and as such must be securely fastened to a rigid, structural member of the garage wall or ceiling. It is entirely up to the installer to determine the fixing method and the structural suitability of the fixing points
- The engage / disengage instruction tag must remain attached to the engage / disengage cord
- Locate the wall switch;
    - Within site of the garage door, and
    - At a minimum height of 1.5 meters above the ground so that it remains out of the reach of small children, and
    - Away from all moving parts of the garage door
- The entrapment warning label must be secured in a prominent position adjacent to the wall switch
- Do not connect the **SDO4 SMART** to the power outlet until this manual instructs you to do so
- Subsequent to installation and adjustment, the **SDO4 SMART** must stop and reverse direction when it comes into contact with a 40mm high solid object placed on the floor under the garage door
- The correct function of the safety obstruction force system should be checked on a monthly basis
- Never use the **SDO4 SMART** unless the garage door is in full view and free from any object which may impede the movement of the garage door such as cars, children and / or adults
- Never allow children to operate the **SDO4 SMART**
- Never operate the **SDO4 SMART** when any persons are under or near the path of the garage door. Children must be supervised at all times when near the garage door and when the **SDO4 SMART** is in use
- Never attempt to disengage the **SDO4 SMART** to manual operation when there are children/ persons and / or solid objects including motor vehicles under or near the path of the garage door as the garage door may fall sharply upon Manual Release from the **SDO4 SMART**
- Never attempt to open or close the garage door by pulling on the engage / disengage cord
- Never attempt to make any repairs or remove covers from the **SDO4 SMART** without first disconnecting the power supply cord from the main power supply
- Removal of the **SDO4 SMART**'s protective covers must only be performed by a technically qualified person. Attempting to remove the protective covers or repair the **SDO4 SMART** without suitable technical qualification may result in severe personal injury, death and/or property damage
- Install the actuating member for the manual release at a height less than 1,8m
- Install any fixed control at a height of at least 1,5m and within sight of the door but away from moving parts

- For additional safety, we strongly recommend the inclusion of safety beams. Although the **SDO4 SMART** incorporates a pressure sensitive safety obstruction force system, the addition of safety beams will greatly enhance the operating safety of an automatic garage door and provide additional peace of mind. In some countries, it is a mandate of law to fit safety beams. It is the sole responsibility of the owner / installer to fit safety beams in those countries that so require
- Always ensure that the garage door is fully open and stationary before driving in or out of the garage
- Always ensure the garage door is fully closed and stationary before moving out of its view
- Adjustments to the safety stop / reverse force settings must only be carried out by a technically qualified person. Attempting to adjust the settings without suitable technical qualification may result in severe personal injury, death and / or property damage
- Keep hands and loose clothing clear of the **SDO4 SMART** and garage door at all times
- In order for the safety obstruction force system to function, it must first encounter an obstruction in the form of an object / person onto which some force MUST be exerted. As a result, the object / person / garage door may suffer DAMAGE AND / OR INJURY
- The safety obstruction system is designed to work on STATIONARY objects only. Serious personal injury, death and / or property damage may occur if the garage door comes into contact with a moving object during an open or close cycle
- Keep remote controls away from children
- Take care when operating the manual release since an open door may fall rapidly due to weak or broken springs or being out of balance
- Each month check that the drive reverses when the door contacts a 40 mm high object placed on the floor. Adjust if necessary and recheck since an incorrect adjustment may present a hazard
- Permanently fix the labels warning against entrapment in a prominent place or near any fixed controls
- Permanently fix the label concerning the manual release adjacent to its actuating member
- After installation, ensure that the mechanism is properly adjusted and that the drive reverses when the door contacts a 40 mm high object placed on the floor
- The drive must not be used with a door incorporating a wicket door (unless the drive cannot be operated with the wicket door open)
- After installation, ensure that parts of the door do not extend over public foot paths or roads

Please note that images in this installation manual are not to scale.

# 2. Specifications

## 2.1. Physical Dimensions

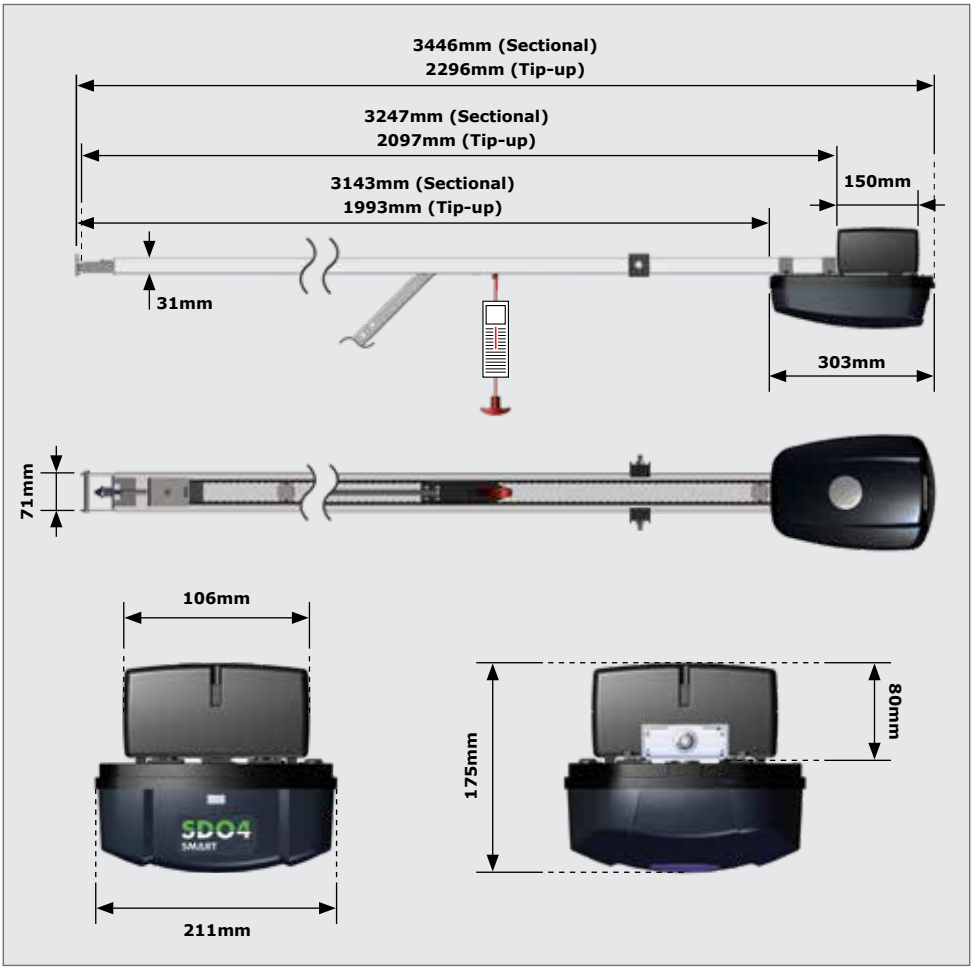


FIGURE 1. OVERALL DIMENSIONS FOR THE SDO4 SMART

## 2.2. Technical Specifications

| | T10 | T12 |
|---|---|---|
| **Input voltage** | 230V AC @ 50/60Hz[1] | |
| **Motor voltage** | 24V DC | |
| **Motor power - rated** | 80W DC | 100W DC |
| **Motor supply** | Battery supply 2x 12V 3.4Ah | Battery supply 2x 12V 3.4Ah |
| **Max door width** | 6500mm | |
| **Max door area** | 12 square metres | 15square metres |
| **Max holding capacity** | 1000N | 1200N |
| **Maximum push/pull force** | 40kgf | 50kgf |
| **Operations in standby mode** | Up to 90 depending on the door size / weight / height / duration of power failure / condition of batteries | |
| **Operator travel speed[3]** | 9m/min | |
| **Door travel adjustment** | Physical Endstops (Automatic limit set) | |
| **Safety obstruction force system** | Built-in menu | |
| **Light** | LED 2W | |
| **Autoclose[2]** | Menu Selectable | |
| **Infrared safety beams** | Menu Selectable. (Optional, but recommended) | |
| **Radio receiver** | Code-hopping 433MHz | |
| **Receiver code storage capacity** | 20x 4-Button NOVA transmitters | |

1: Can operate off a solar supply, please consult Centurion Systems (Pty) Ltd for assistance
2: Requires infrared safety beams to be fitted
3: Speed varies with load

**TABLE 1**

## 2.3. Fuse Protection

The following protection fuses are provided on the system:

| Item | Type | Rating |
|---|---|---|
| **Main controller** | | |
| Motor circuit | ATO | 15A |

**TABLE 2**

# 3. Product Identification

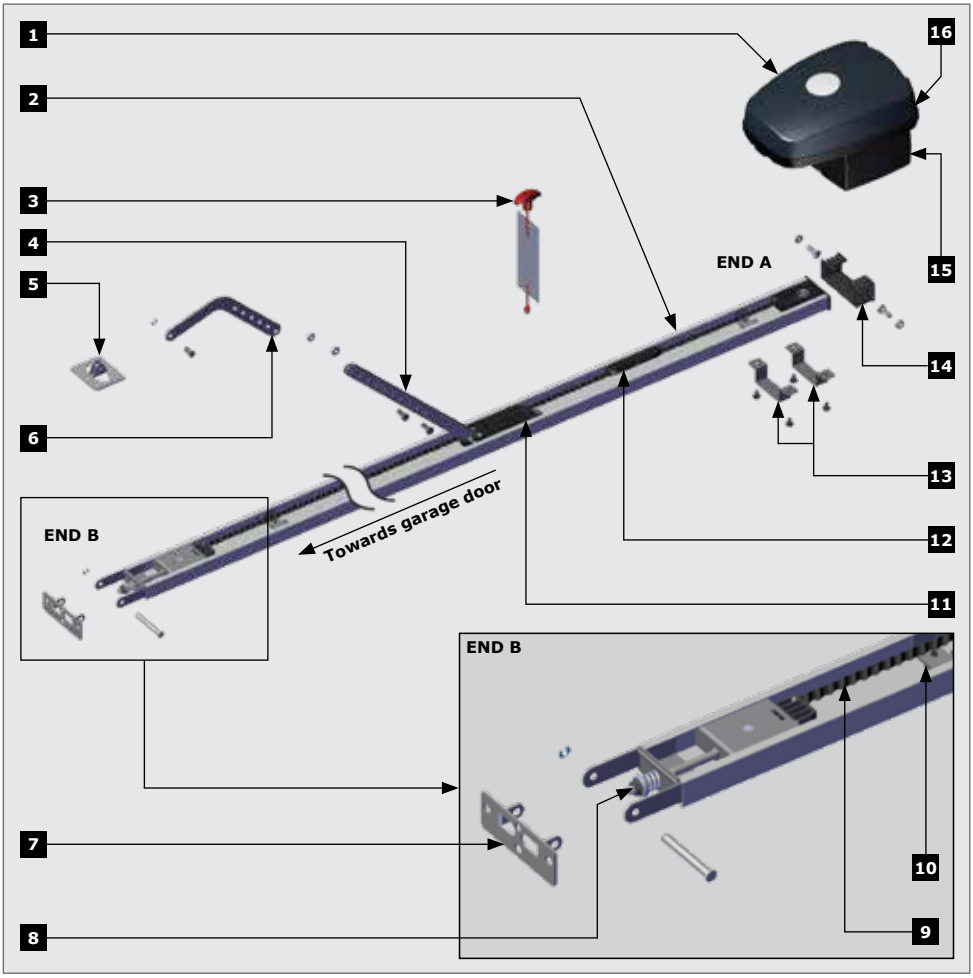


FIGURE 2. PRODUCT IDENTIFICATION

1. Control head unit
2. Rail
3. Release handle with warning label
4. Straight towing arm
5. Towing bracket
6. Bent towing arm
7. Header bracket
8. Tensioning nut and spring
9. Drive Belt
10. End stop
11. Carriage
12. Belt bullet
13. Head unit brackets
14. Rail hanger
15. Battery housing
16. Screw to remove the Control Head Cover

## 3.1. Fasteners List and Spares

| Description | QTY |
|---|---|
| ST5.5 x 50 Self-tapping Coach Screws | 4 |
| ST8 x 60 Self-tapping Screws | 3 |
| ST6.3 x 25 Self-tapping Screws - Hex Flange Head | 3 |
| M6 x 8 Black Cross Pan Head Screws | 2 |
| M8 x 20 Hexagon Head Bolts | 6 |
| M6 x 12 Black Wizzlock Bolts | 4 |

| Description | QTY |
|---|---|
| M8 Wizzlock Nuts | 8 |
| Ø8 x 71 Clevice Pin | 1 |
| Ø8 x 18 Black Clevice Pin | 1 |
| Ø2 Hairpin Clips | 2 |
| 12 x 60mm Fischer Plugs | 3 |
| M8 x 25(Pitch 1.25) Black Gutter Bolts | 2 |

TABLE 3

# 4. Required Tools and Equipment

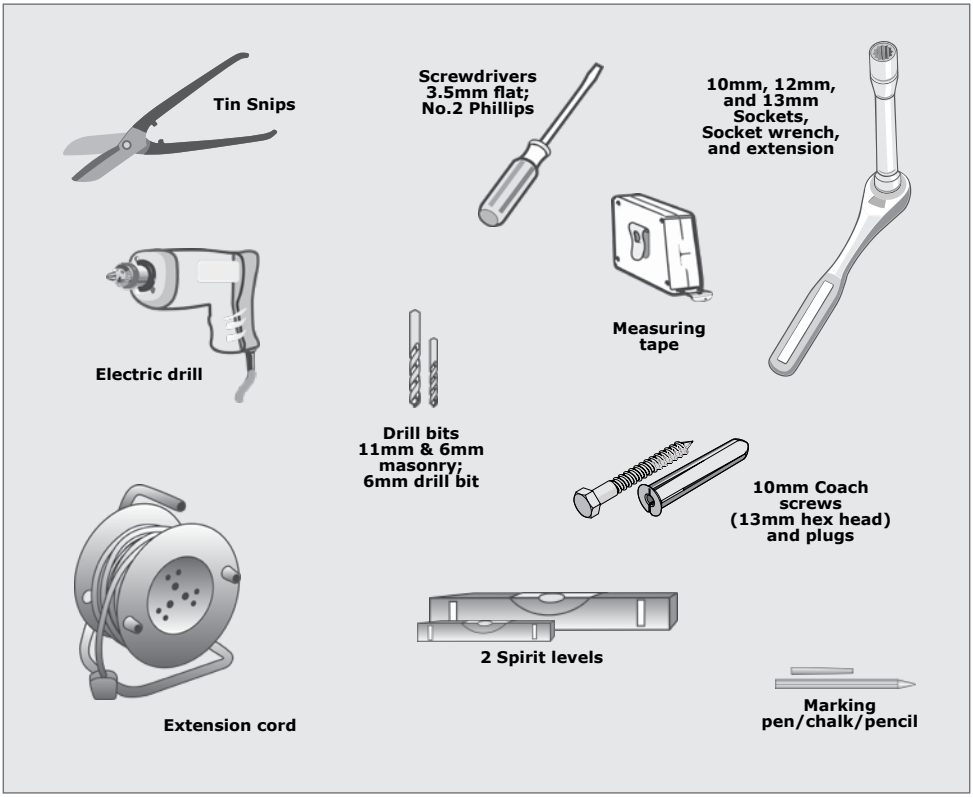


FIGURE 3. REQUIRED TOOLS AND EQUIPMENT

# 5. Preparation of Site

## 5.1. General Considerations for the Installation

Always recommend the fitment of additional safety equipment such as safety edges and safety beams, for additional protection against entrapment or other mechanical risks.

Ensure that no pipes or electrical cables are in the way of the intended installation.

**Install the garage operator only if:**

- It will not pose a hazard to the public
- The installation will meet all municipal and/or local authority requirements once completed
- The door mass and application is within the operator specifications
- There is a properly-earthed general purpose 220-240V AC power outlet that has been installed by a qualified electrical contractor
- All locks, ropes and / or securing mechanisms have been removed
- The ceiling structure is adequate enough to support the weight of the **SDO4 SMART**
- The garage door is in good working order, meaning:
  - it opens freely;
  - it is well-balanced;

    An improperly-balanced or malfunctioning garage door could cause serious personal injury, death and / or property damage.
    Have a qualified person check and, if required, make repairs to the garage door before installing the **SDO4 SMART**.
  - it does not move on its own if left in any position for more than 100mm;
  - it can be installed to have sufficient clearance between moving parts when opening or closing to reduce the risk of personal injury and / or entrapment

Any repairs to the garage door that need to be done due to any of the above requirements not being in place, must be carried out by technically qualified persons.

**Attempting to repair the garage door without suitable technical qualifications, may result in severe personal injury, death, and / or property damage.**

# 6. Operator Installation

## 6.1. Assembly Instructions

### 6.1.1. Identify the garage door type

Identify the garage door type and then select the preferred installation method and assembly type that is best-suited to the application.

**Sectional doors**

- Use a 3247mm one-piece drive rail
- The standard 3247mm drive rail will lift a door up to 2440mm high. (An optional drive rail extension kit is available for doors over 2440mm high)
- The **SDO4 SMART** is supported by the drive rail hanger which is hung from the ceiling using appropriate hanging material
- The drive rail must be perpendicular to the door as shown in Figure 4
- The header bracket may be mounted on the front wall of the garage or on the ceiling adjacent to the front wall

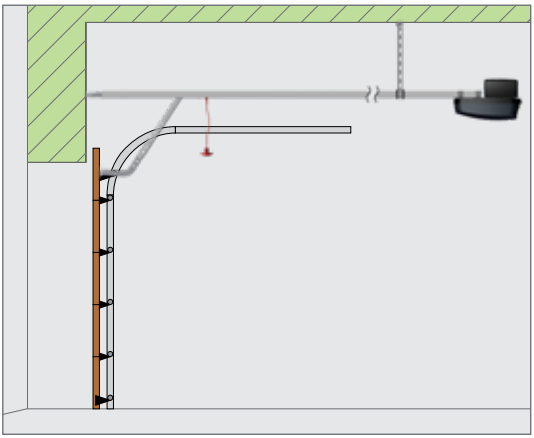

**FIGURE 4**

**Tip-Up doors**

- Use a 2097mm one-piece drive rail
- The **SDO4 SMART** is supported by the drive rail hanger which is hung from the ceiling using appropriate hanging material
- The drive rail must be angled, so that the pivot points at each end of the connecting arm should be as close to horizontal as possible when the door is in the fully open position
- The header bracket may be mounted on the front wall of the garage or on the ceiling adjacent to the front wall

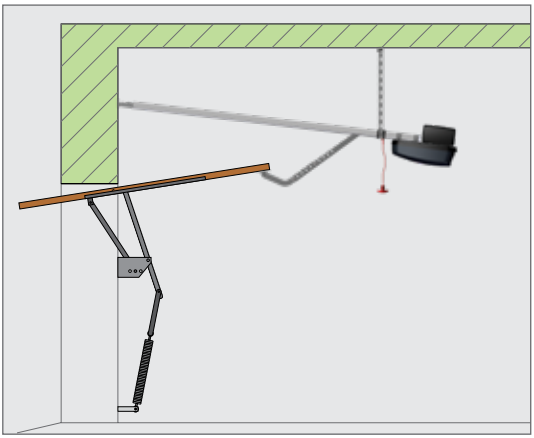

**FIGURE 5**

### 6.1.2. General assembly

Open the packing carton and expose the **SDO4 SMART** components.

Orientate the drive rail so that the terminal bracket faces towards the garage door

1. Fit the M8 black gutter bolts onto the drive rail hanger. Secure them using the supplied M8 nuts. This must be done before fitting the drive rail hanger onto the Drive Rail.
   Fit the Drive Rail hanger and slide it down the Drive Rail starting from 'End A' (Figure 6).

   It is important at this point of the installation to open the battery housing (Refer back to Figure 2), and connect the batteries before continuing with the installation.

2. Orientate the Drive Rail as shown in Figure 7, and fit 'End A' over the motor coupling found on the motor.

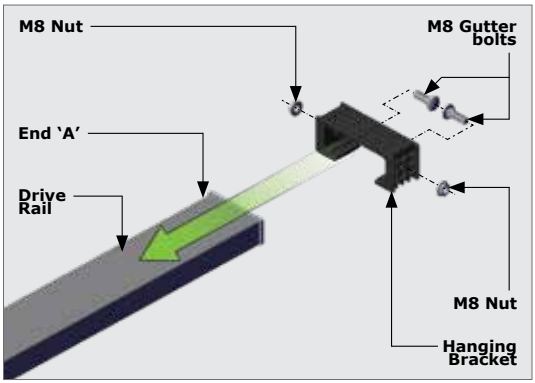


FIGURE 6

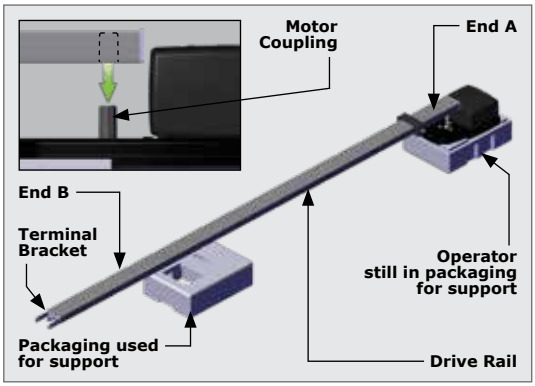


FIGURE 7

Keep the operator in its packaging for support, and use the other half of the packaging to support the other end of the Drive Rail.

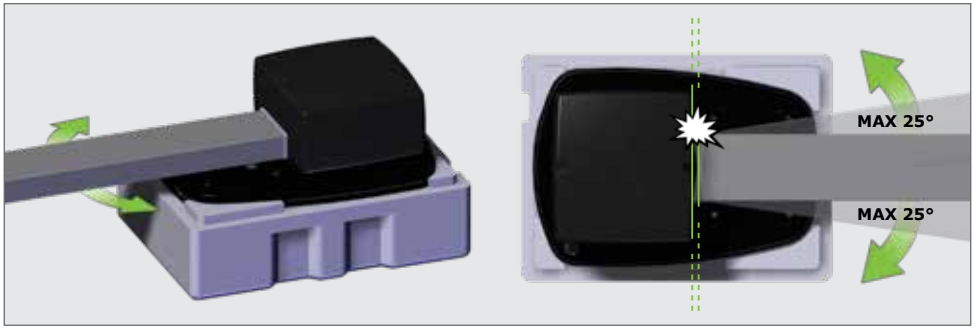


FIGURE 8

3. Swing the track from side to side should the motor coupling struggle to engage with the shaft. DO NOT exceed 25° in either direction.

4. Place the two U-Brackets into position over the four holes found on the head unit (Figure 9).

5. Secure the U-Brackets into position using 4x black M6x12mm screws supplied (Figure 10).

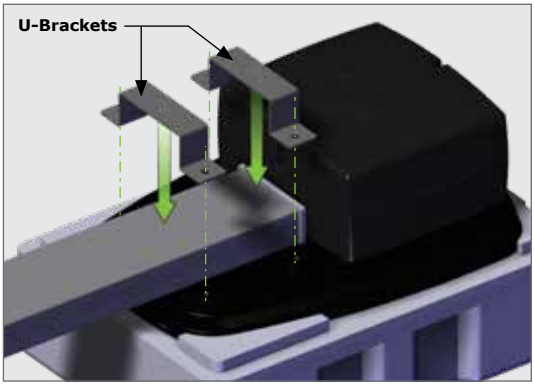


FIGURE 9

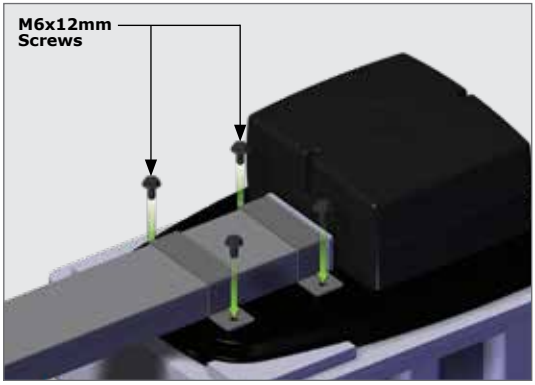


FIGURE 10

### 6.1.3. Tensioning the belt

The belt comes pre-tensioned from the factory; however, ensure that the spaces between the spring windings are 0.5-1mm. Use a 13mm socket and wrench to tighten the drive should there, for whatever reason, be a deviation from these values.

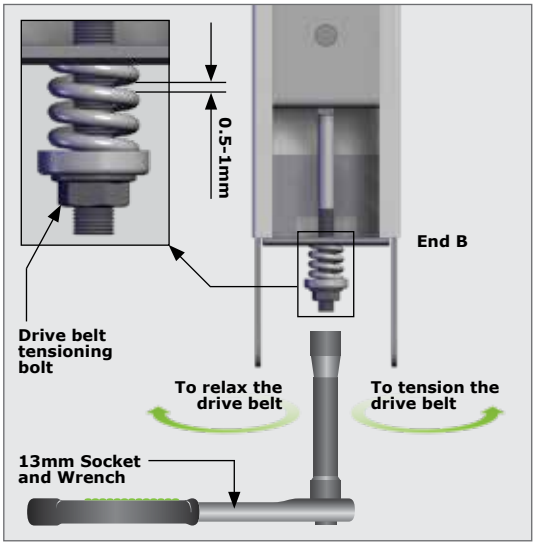


FIGURE 11

## 6.2. Installation Instructions

### 6.2.1. Sectional doors (For Tip-up doors skip to Section 6.2.2)

**Before commencing the installation, ensure that you have carefully read and understood all safety recommendations. In particular, ensure that the installation of the garage door complies with the requirements specified. Make any necessary adjustments to the garage door BEFORE commencing the installation!**

**Important considerations to note before commencing installation**

- The opening heights are **2135mm** for standard doors, or **2540mm** for caravan height doors
- The structure is level, square and plumb
- For sectional doors, the door panel overlaps the opening by no more than 30mm at the top, and sides.

### Door traveling path

The travel path of a garage door is determined by the path the top section of the garage door takes as the door is being opened or closed.

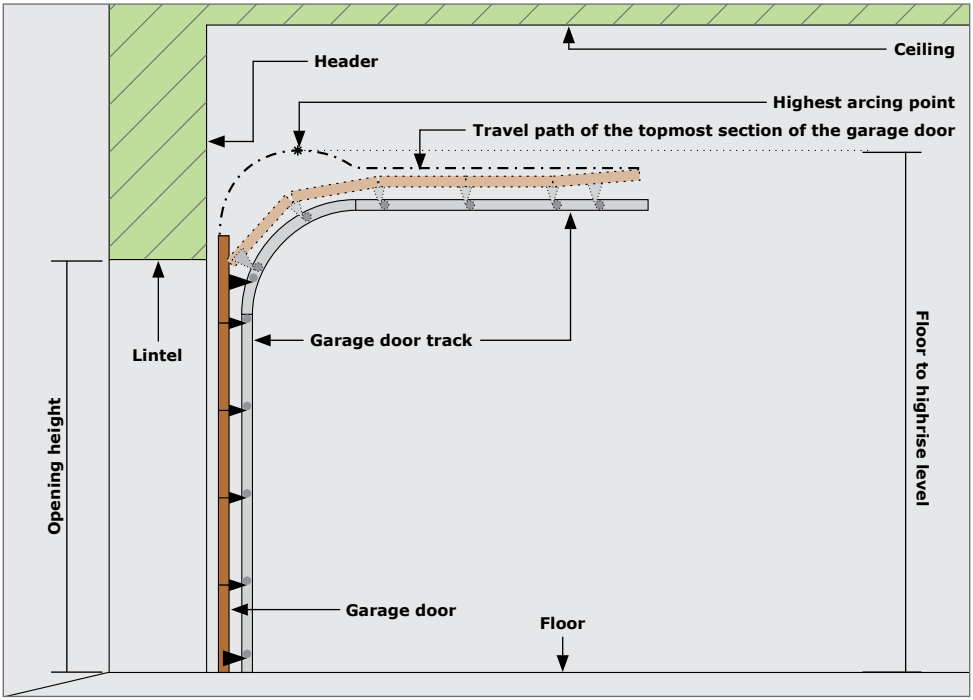


FIGURE 12

### 6.2.1.1. Mounting the header bracket

**The header bracket carries ALL of the opening and closing thrust of the SDO4 SMART and as such must be securely fastened to a rigid, structural member of the garage. It is entirely up to the installer to determine the fixing method and the structural suitability of the fixing points.**

When marking important lines needed for mounting the header bracket, ensure that a spirit level is used, as it is imperative that these lines are as level and straight as possible.

Determine the highest arcing point of the garage door and mark this as a horizontal line on the header above the top edge of the garage door.

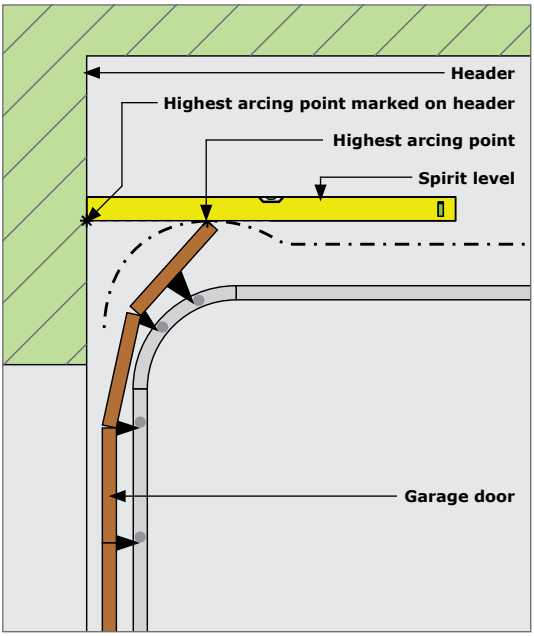


FIGURE 13

Close the garage door, and determine the garage door center line and mark a vertical line on the header above the door.

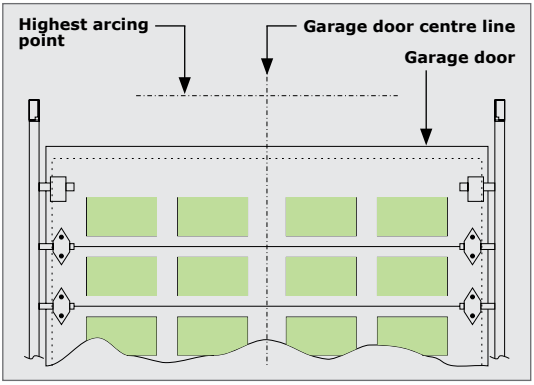


FIGURE 14

Place the header bracket on the wall as shown in Figure 15. Ensure that the **bottom edge** of the bracket is level, and **no more than 50mm above** the highest arcing point of the garage door. Mark the location of the four screw holes (Hole A, B, C and D[optional]).

Note the orientation of the header bracket.

**Mounting the drive rail more than 50mm above the highest arcing point of the garage door may cause the drive rail to flex excessively.**

Drill four 11mm diameter holes in position of 'Hole A', 'Hole B', 'Hole C' and 'Hole D'(optional), at least 50mm deep.

Place a fischer plug in each hole, followed by the header bracket. Secure it in position with at least three coach screws (supplied) (13mm hexagonal head).

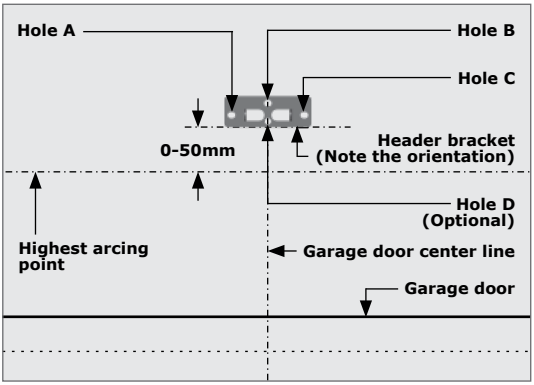


FIGURE 15

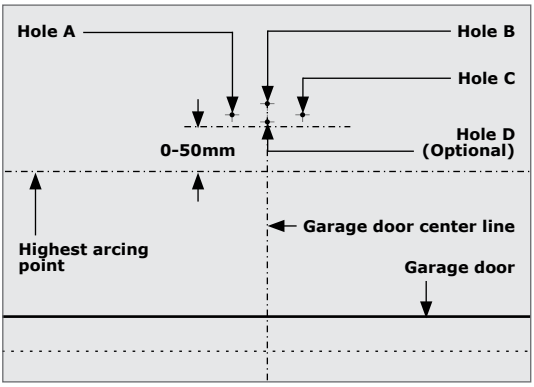


FIGURE 16

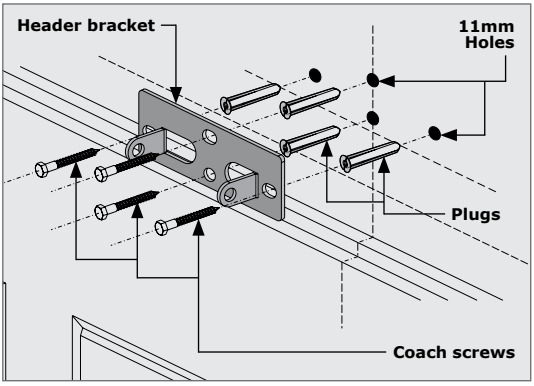


FIGURE 17

If after securing the header bracket, it is slightly out (not level), use a hammer to knock the tabs gently up or down with a small spirit level placed on top of them. This will ensure a perfectly level installation (Figure 18).

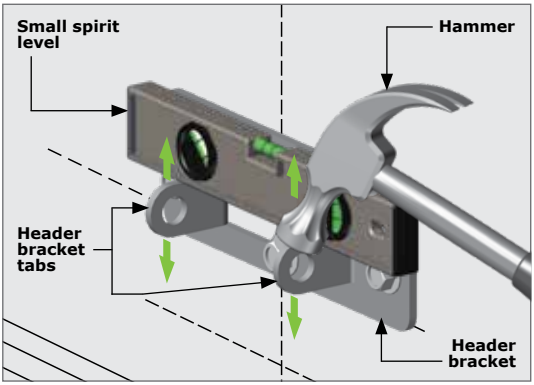


FIGURE 18

### 6.2.1.2. Mounting the SDO4 SMART to the header bracket

It is important at this point of the installation to ensure that the batteries are connected before continuing with the installation.

Position the **SDO4 SMART** in place, with the open end of the drive rail facing the floor, and the tensioning bracket towards the garage door. You will need a second person to assist you with this.

If you are on your own, use a ladder to support the control unit end of the **SDO4 SMART** while you are positioning it for the next step (Figure 19).

Align the holes on the side of the tensioning bracket with the holes of the header bracket.

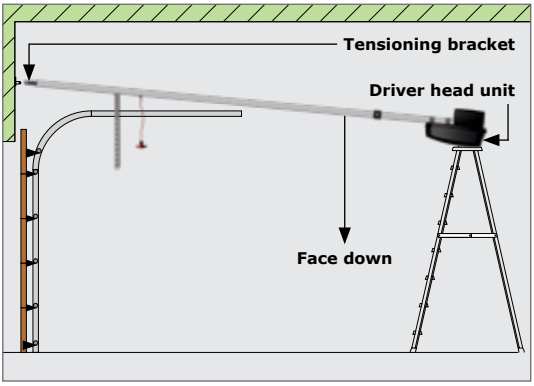


FIGURE 19

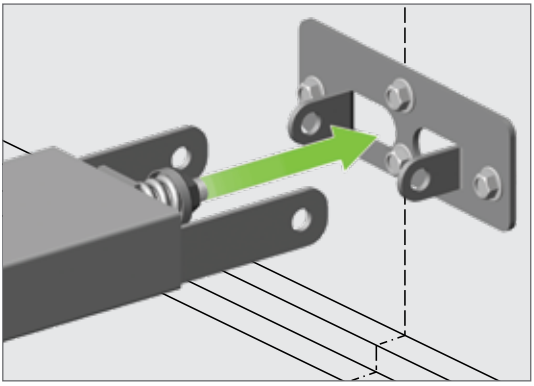

FIGURE 20

Locate the long clevis pin through the holes and secure it into position with a supplied E-Clip on the other end of the clevis pin.

Split Pins have also been supplied should they be preferred over the use of the circle pin clips.

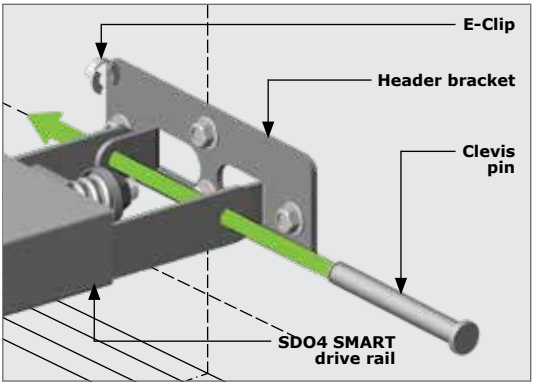


FIGURE 21

### 6.2.1.3. Mounting the SDO4 SMART drive rail to the ceiling

Open the garage door, and gently rest the **SDO4 SMART** on top of the open door.

If your ladder is high enough, we recommend resting it on top of the ladder.

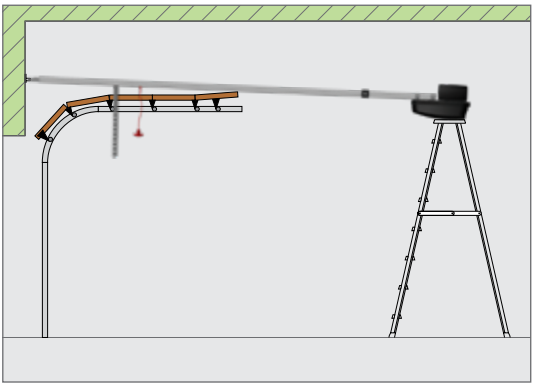

FIGURE 22

Find the centre line of the garage door, and mark it on the ceiling above the location of the drive rail hanger.

You can use the **SDO4 SMART** drive rail as a gauge to assist you if needed.

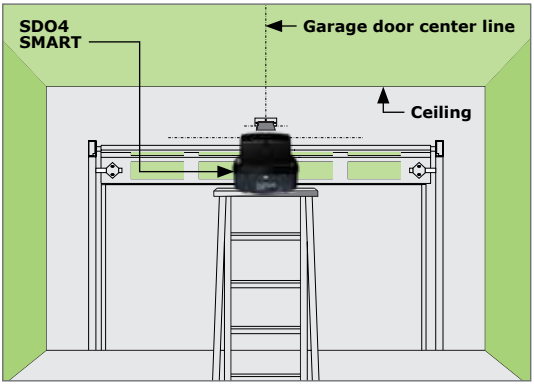


FIGURE 23

Use a long spirit level along the length of the **SDO4 SMART** drive rail, and level out the **SDO4 SMART**, so that it is running parallel to the ceiling.

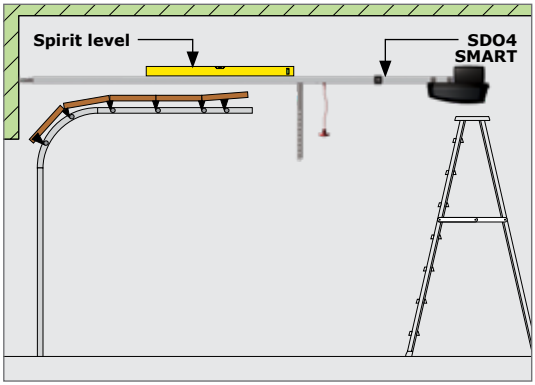


FIGURE 24

Place another spirit level perpendicular to the ceiling, and line it up with the center of the drive rail hanger bolt on the side of the drive rail hanger. Make a mark on the ceiling, and repeat this for the other side of the drive rail hanger.

Ensure that the drive rail hanger bracket is positioned directly under a **strong** structural member of the ceiling. If it is not, move it along the drive rail to a suitable position before marking it off on the ceiling.

We recommend that the maximum cantilever distance between the hanger bracket and the front edge of the control unit should not exceed 300mm.
(Marked as 'A' in Figure 25)

Draw a line on the ceiling joining these two marks, perpendicular to the garage door center line made earlier.

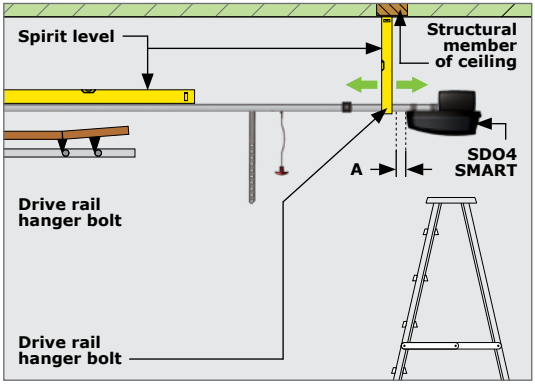


FIGURE 25

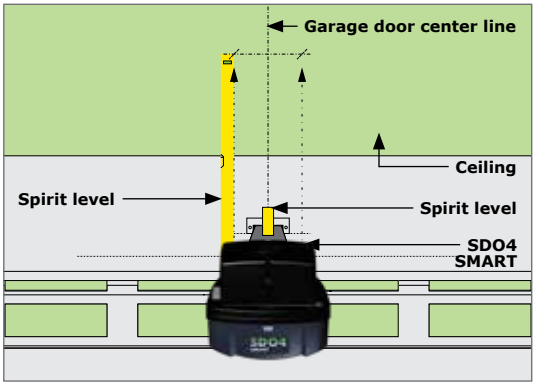


FIGURE 26

Measure and cut a 150mm length of punched angle iron with a pair of tin snips.

Snip off the four corners of the punched angle iron to add a degree of safety and neatness to the installation.

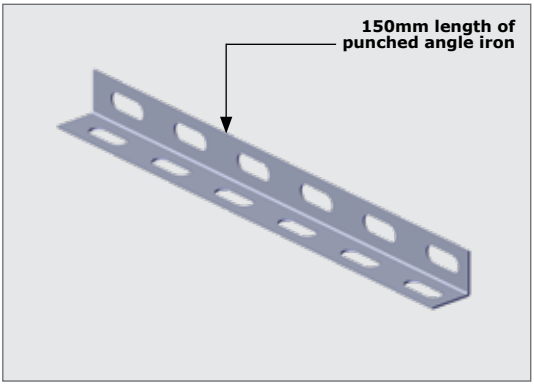


FIGURE 27

Align the punched angle iron centered onto the garage door centre line, and the perpendicular line running along the center of the horizontal face holes.
The horizontal face must face the back of the garage. Secure the punched angle iron to the ceiling with suitable screws (depending on the structural member of the ceiling).

**Ensure that the punched angle iron is mounted to a strong structural member in the ceiling.**

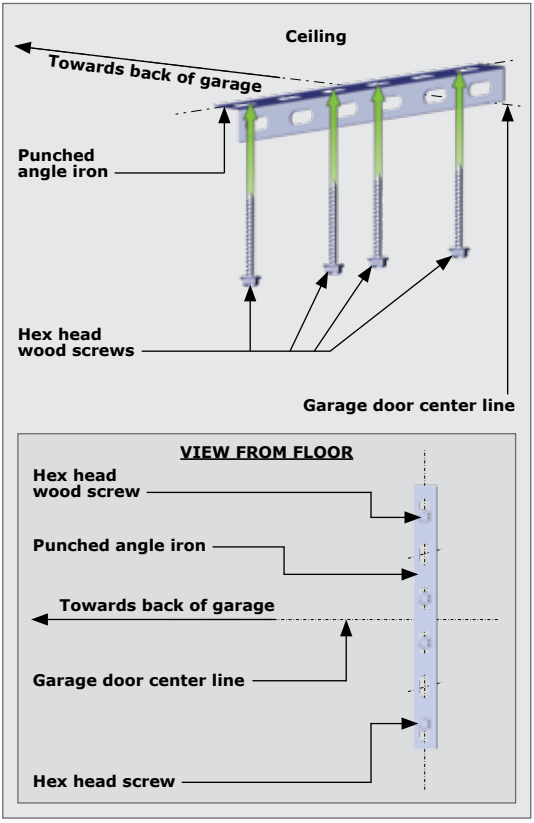


FIGURE 28

Level the **SDO4 SMART** again, and measure the length needed from the ceiling to the underside of the drive rail, marked as 'Value Xmm' in Figure 29.

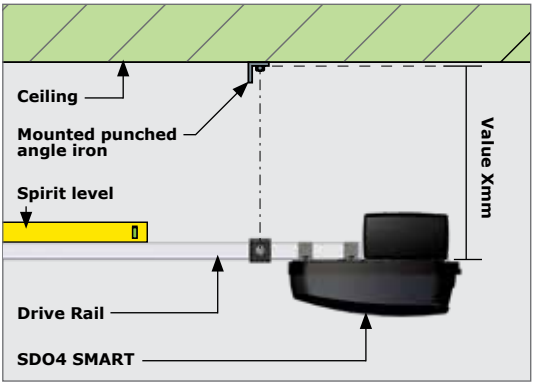


FIGURE 29

Using an angle grinder or hack saw, cut two lengths of punched angle iron to the measurement taken for 'Value Xmm'.

Snip off the four corners of the punched angle iron to add a degree of safety and neatness to the installation.

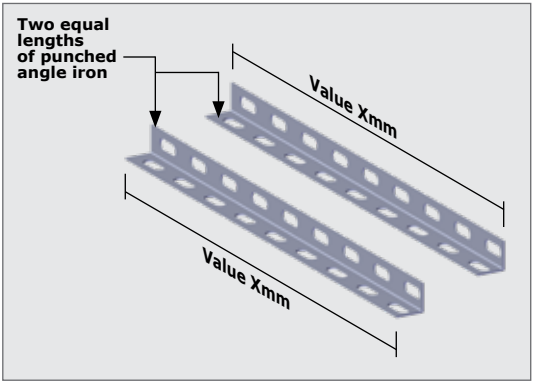


FIGURE 30

Remove the two drive rail hanger nuts from the bolts, and locate the two lengths of punched angle iron into position as shown in Figure 31. Secure them in position with the two drive rail hanger nuts.

**Ensure that the punched angle iron does not protrude further than the SDO4 SMART drive rail base, as this will interfere with the operation of the motor!**

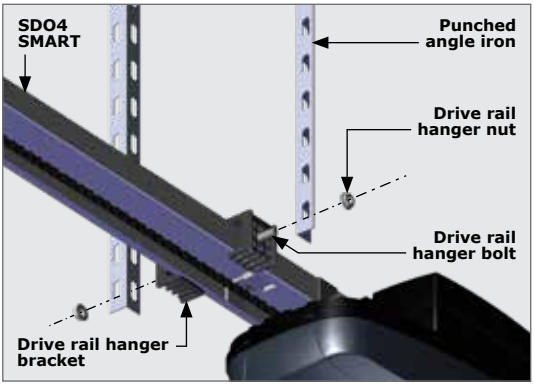


FIGURE 31

Use a spirit level to ensure that the **SDO4 SMART** is still level and parallel to the ceiling. Align the holes of the punched angle iron mounted to the ceiling, with the holes on the punched angle iron mounted to the drive rail hanger. Secure it into position using two supplied M8 flange bolts and nuts using a 13mm socket.

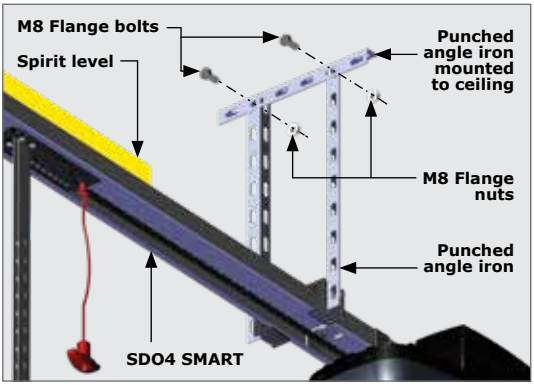


FIGURE 32

Using a spirit level, ensure that the **SDO4 SMART** is level on both the X-Axis and Z-Axis of the horizontal plain. If it is not, it may cause the motor to stress, or the drive rail to twist.

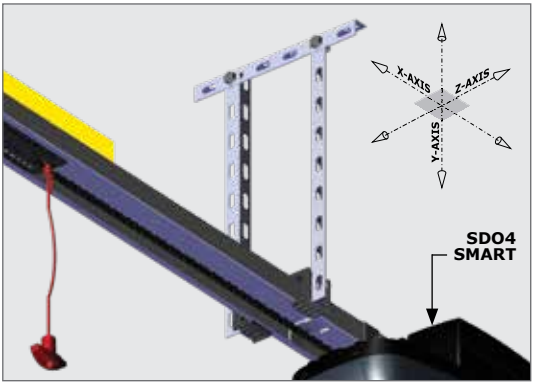


FIGURE 33

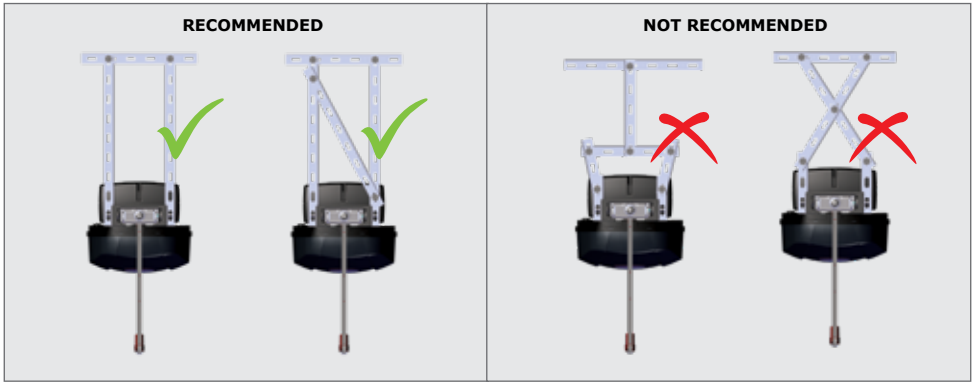


FIGURE 34. CORRECT AND INCORRECT MOUNTING CONFIGURATIONS

### 6.2.1.4. Mounting the towing bracket to the garage door.

Close the garage door, and find its center line. Make a level mark perpendicular to the garage door center line, and in line with the top edge of the top roller of the garage door.

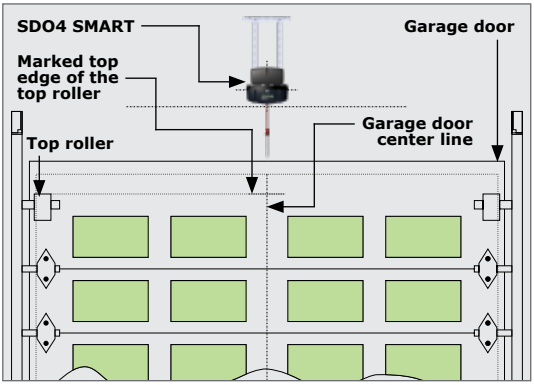


FIGURE 35

Center the towing bracket on the garage door center line and so that the center of the two holes on the protruding tabs are in line with the top edge of the top roller.

Place a small spirit level on the top edge of the towing bracket, to ensure that it is level when drilling holes.

Secure the towing bracket into position using the three hexagonal head self-tapping screws supplied.

If the garage door is heavier than average, more screws can be used to fix the bracket to the garage door.

Ensure that the length of the screws do not exceed the depth of the garage door.

The above method is for the purpose of wooden garage doors. Should you have a garage door that is not constructed from wood, such as a steel garage door, we recommend the use of TEK® screws to secure the towing bracket to the garage door.

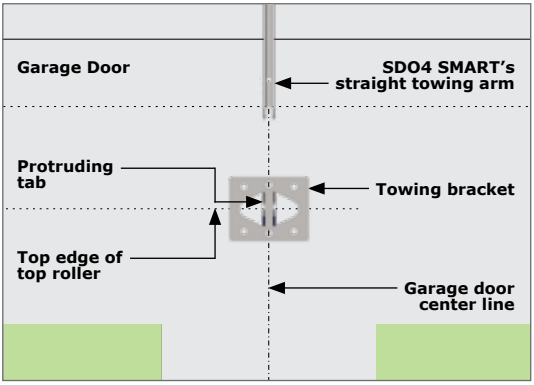


FIGURE 36

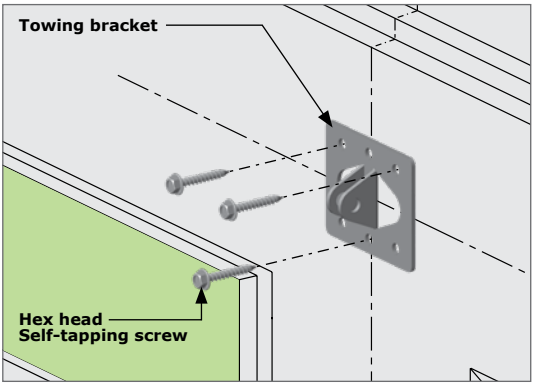


FIGURE 37

### 6.2.1.4. Fitting the bent towing arm to the towing bracket and straight towing arm.

Slot the bent towing arm between the two protruding tabs of the towing bracket, and align the holes. Note the orientation of the bent towing arm.

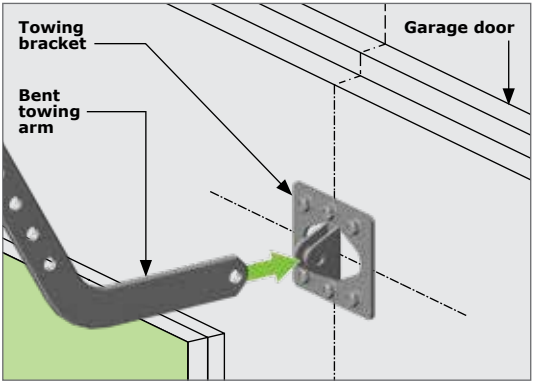


FIGURE 38

Locate the short clevis pin through the holes and secure it into position with a supplied E-Clip on the other end of the clevis pin.

Split Pins have also been supplied should they be preferred over the use of the circle pin clips.

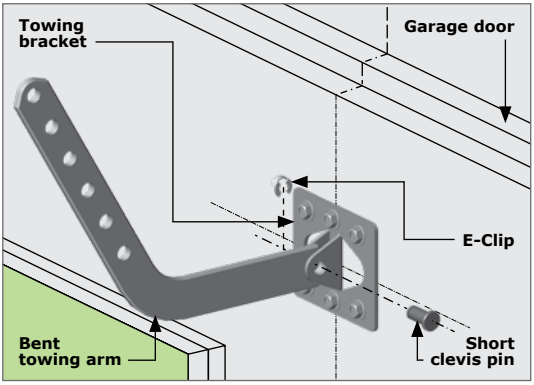


FIGURE 39

Slot the bent towing arm into the straight towing arm, and align the holes. If they do not align, move the carriage up or down the drive rail in order to align the holes of the bent and straight towing arms.

Ensure that the two towing arms overlap by at least two holes. This will ensure a strong join, and prevent the arm from swiveling whilst the motor is in operation.

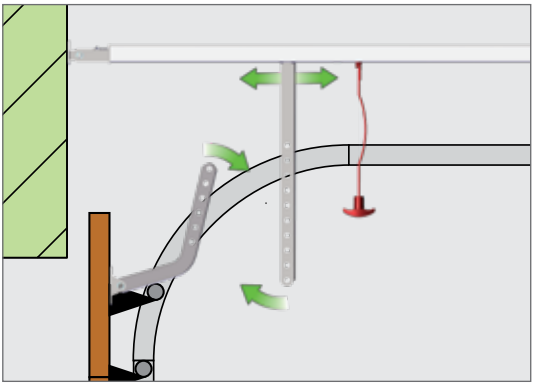

FIGURE 40

The two towing arms must be joined in such a way that they are just short of parallel to the garage door and the ceiling.
Angle 'Z' should be ±80° when the garage door is in the closed position, as shown in Figure 41.
This will put less strain on the motor on start-up and, furthermore, aid in preventing the garage door from being forced open by hand.

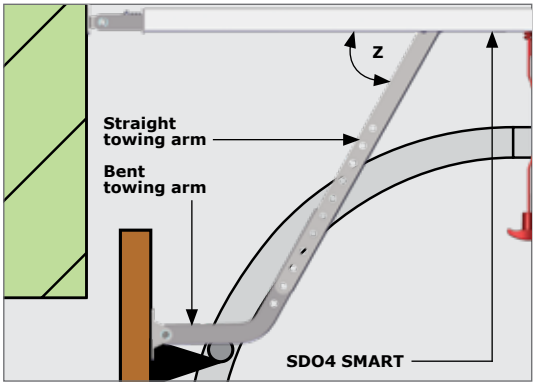


FIGURE 41

Once aligned, secure the towing arms into position using the two supplied hexagonal head flange nuts and bolts: one set through the bottom hole of the straight towing arm, and the other through the top hole of the bent towing arm.

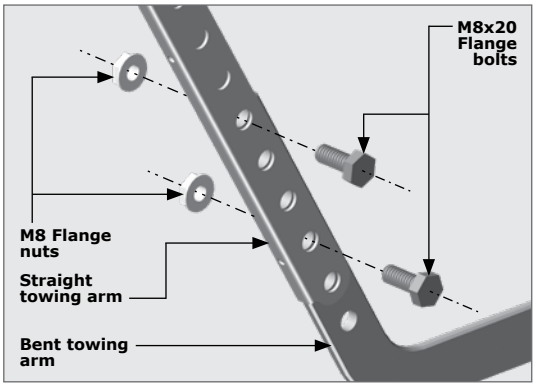


FIGURE 42

Please do not forget to affix the safety sticker and tag.

The **SDO4 SMART** is now installed and ready for programming.

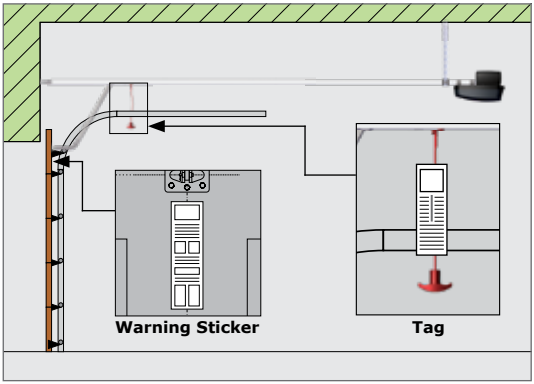


FIGURE 43

### 6.2.2. Tip-up doors

**Before commencing the installation, ensure that you have carefully read and understood all safety recommendations. In particular, ensure that the installation of the garage door complies with the requirements specified. Make any necessary adjustments to the garage door BEFORE commencing the installation!**

**Important considerations to note before commencing installation**

- The opening heights are **2135mm** for standard doors
- The structure is level, square and plumb

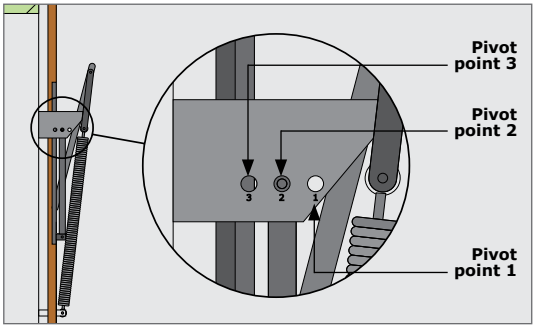


FIGURE 44

- Pivot position No. 1 or 2 (140mm or more head room) is recommended for automation. If insufficient headroom is available, contact an approved garage door installer to assist with possible modifications

**Door traveling path**

The travel path of a garage door is determined by the path that the top section of the garage door takes as the door is being opened or closed.

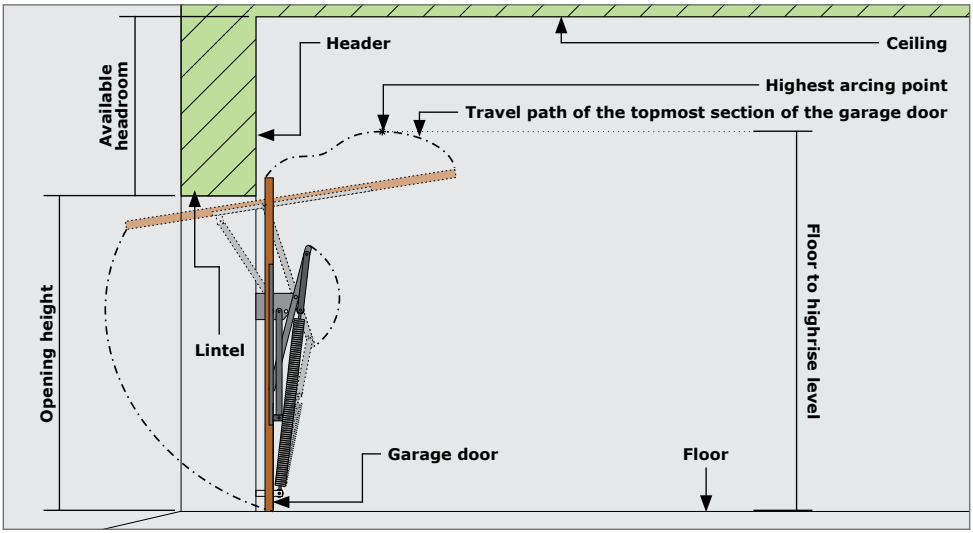


FIGURE 45

### 6.2.2.1. Mounting the header bracket

**The header bracket carries ALL of the opening and closing thrust of the SDO4 SMART and as such must be securely fastened to a rigid, structural member of the garage. It is entirely up to the installer to determine the fixing method and the structural suitability of the fixing points.**

When marking important lines needed for mounting the header bracket, ensure that a spirit level is used, as it is imperative that these lines are as level and straight as possible.

Determine the highest arcing point of the garage door and mark this as a horizontal line on the header above the top edge of the garage door.

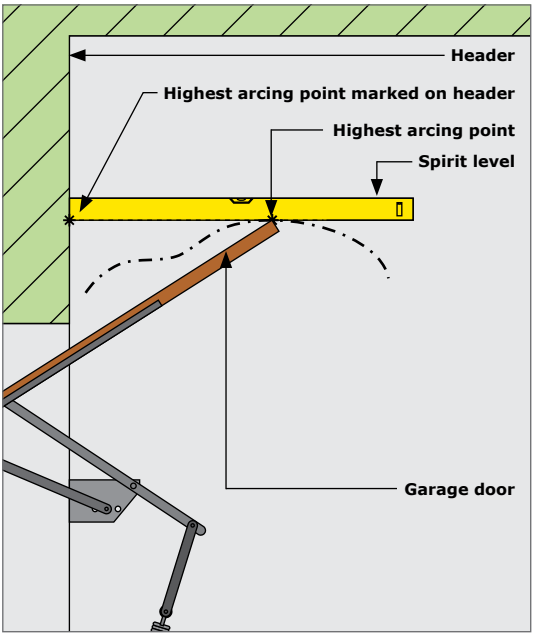


FIGURE 46

Close the garage door, and determine the garage door center line and mark a vertical line on the header above the door.

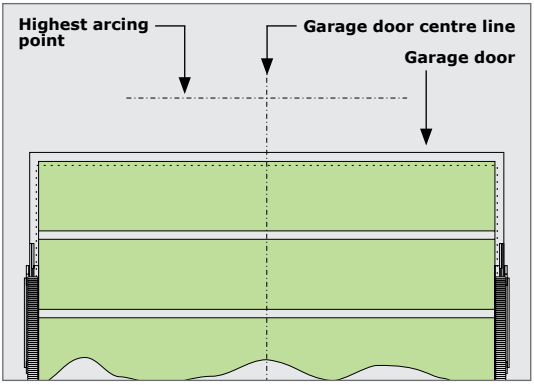


FIGURE 47

Place the header bracket on the wall as shown in Figure 48. Ensure that the **bottom edge** of the bracket is level, and between 20mm - 50mm, but **no more than 50mm above** the highest arcing point of the garage door. Mark the location of the three screw holes (Hole A, B, C and D[optional]).

Note the orientation of the header bracket.

**Mounting the drive rail more than 50mm above the highest arcing point of the garage door may cause the drive rail to flex excessively.**

Drill four 11mm diameter holes in position of 'Hole A', 'Hole B', 'Hole C' and 'Hole D'(optional), at least 50mm deep.

Place a fischer plug in each hole, followed by the header bracket. Secure it in position with at least three coach screws (supplied) (13mm hexagonal head).

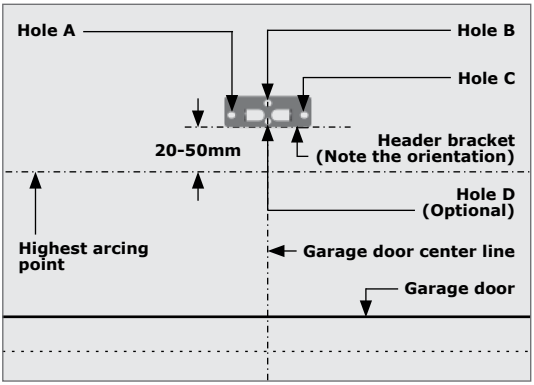


FIGURE 48

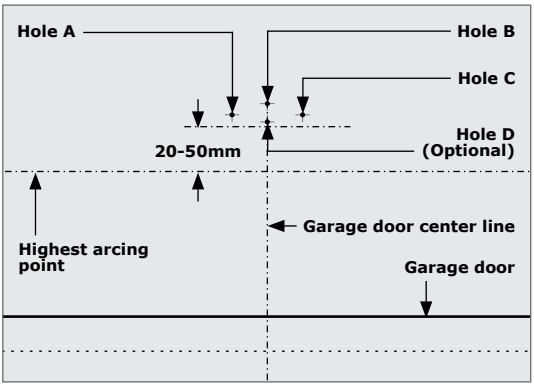


FIGURE 49

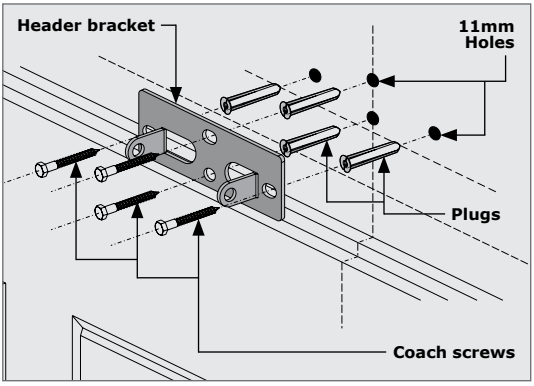


FIGURE 50

If, after securing the header bracket, it is slightly out (not level), use a hammer to knock the tabs gently up or down with a small spirit level placed on top of them. This will ensure a perfectly level installation.

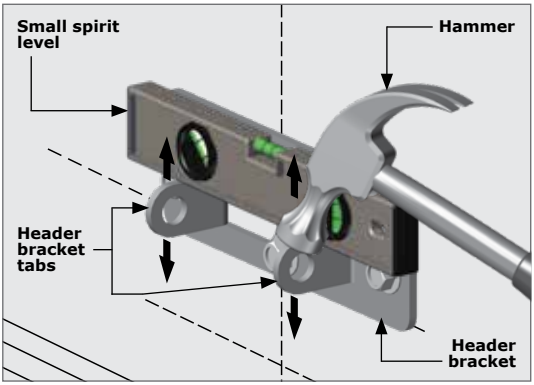


FIGURE 51

### 6.2.2.2. Mounting the SDO4 SMART to the header bracket

It is important at this point of the installation to ensure that the batteries are connected before continuing with the installation.

Position the **SDO4 SMART** in place, with the open end of the drive rail facing the floor, and the tensioning bracket towards the garage door. You will need a second person to assist you with this.

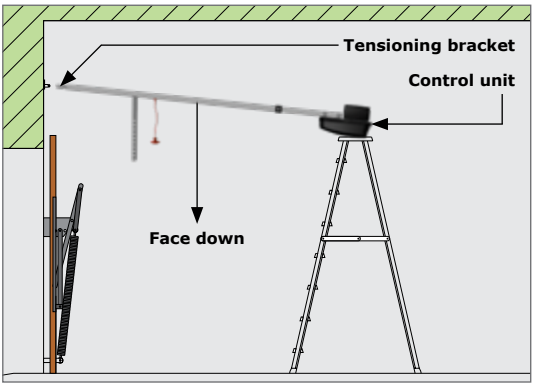


FIGURE 52

If you are on your own, use a ladder to support the control unit end of the **SDO4 SMART** while you are positioning it for the next step (Figure 52).

Align the holes on the side of the tensioning bracket with the holes of the header bracket.

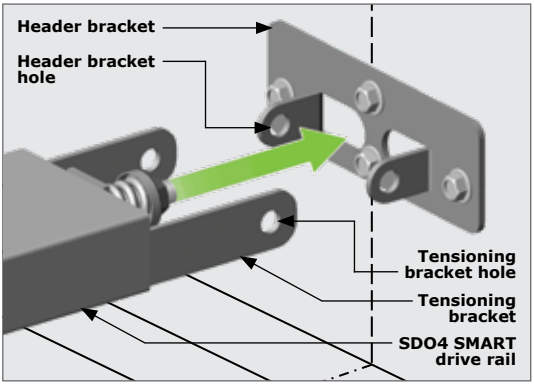


FIGURE 53

Locate the long clevis pin through the holes and secure it into position with a supplied E-Clip on the other end of the clevis pin.

Split Pins have also been supplied should they be preferred over the use of the circle pin clips.

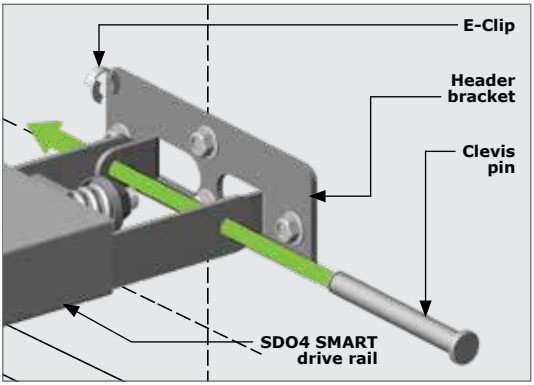


FIGURE 54

### 6.2.2.3. Mounting the SDO4 SMART drive rail to the ceiling

Open the garage door, and gently rest the **SDO4 SMART** on top of the open door.

If your ladder is high enough, we recommend resting it on top of the ladder.

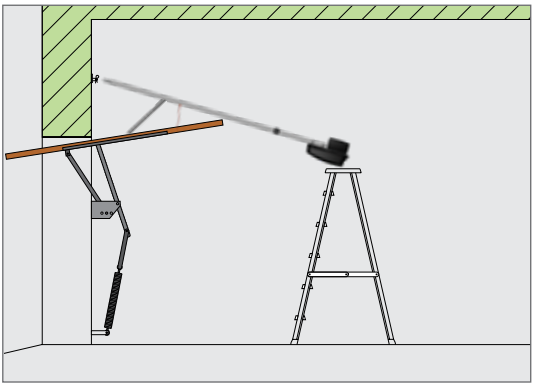

FIGURE 55

Find the center line of the garage door, and mark it on the ceiling above the location of the drive rail hanger.

You can use the **SDO4 SMART** drive rail as a gauge to assist you if necessary.

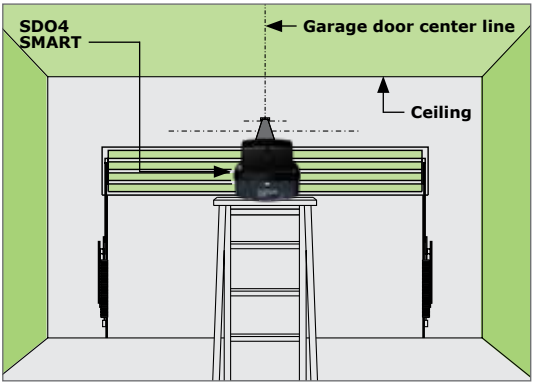


FIGURE 56

Lift the **SDO4 SMART** to a point where the control unit (Point B) is in line with the top of the open garage door (Point A).

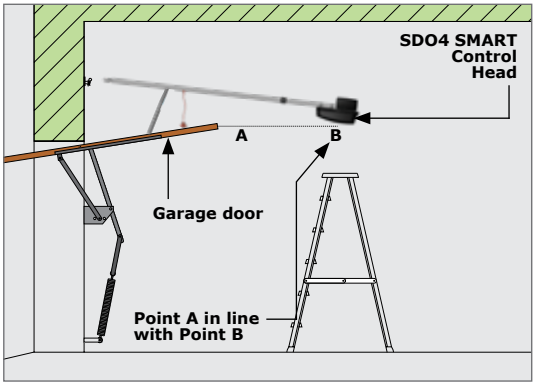


FIGURE 57

Keeping the control unit in line with the top of the garage door, place a spirit level perpendicular to the ceiling, and line it up with the center of the drive rail hanger bolt on the side of the drive rail hanger. Make a mark on the ceiling, and repeat this for the other side of the drive rail hanger.

Ensure that the drive rail hanger bracket is positioned directly under a **strong** structural member of the ceiling. If it is not, move it along the drive rail to a suitable position before marking it off on the ceiling.

We recommend that the maximum cantilever distance between the hanger bracket and the front edge of the control unit does not exceed 300mm.
(Marked as 'A' in Figure 58)

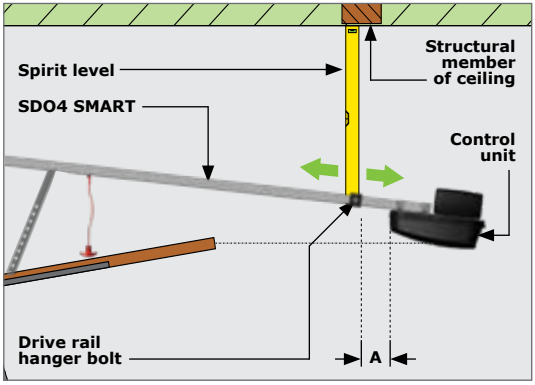


FIGURE 58

Draw a line on the ceiling joining these two marks, perpendicular to the garage door center line made earlier.

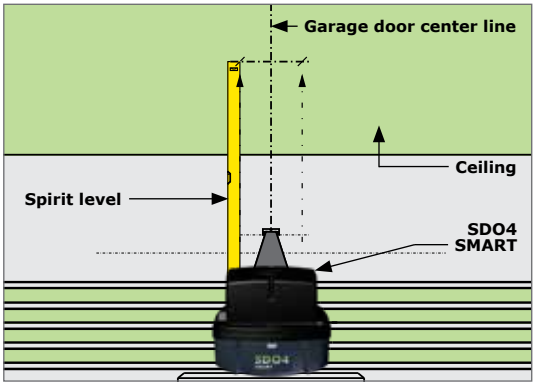


FIGURE 59

Measure and cut a 150mm length of punched angle iron with a pair of tin snips.

Snip off the four corners of the punched angle iron to add a degree of safety and neatness to the installation.

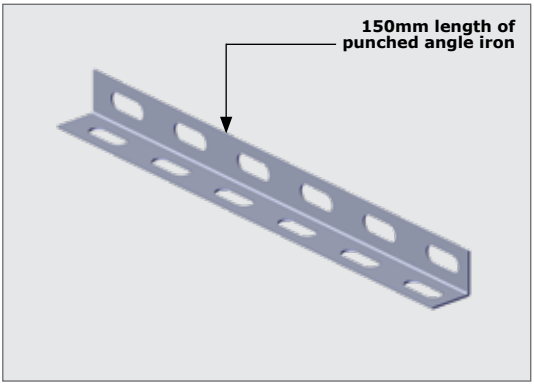


FIGURE 60

Align the punched angle iron centered onto the garage door center line, and the perpendicular line running along the centre of the horizontal face holes.
The horizontal face must face the back of the garage. Secure the punched angle iron to the ceiling with suitable screws (depending on the structural member of the ceiling).

**Ensure that the punched angle iron is mounted to a strong structural member in the ceiling.**

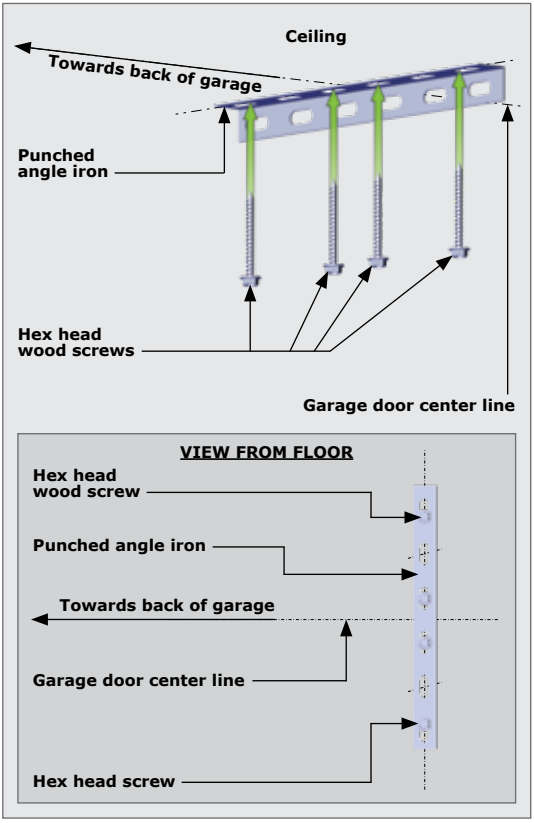


FIGURE 61

Position the **SDO4 SMART** again, as shown in Figure 57, and measure the length needed from the ceiling to the underside of the drive rail, marked as 'Value Xmm' in Figure 62.

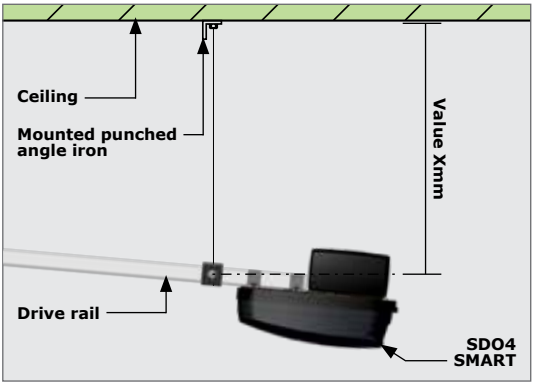


FIGURE 62

Using an angle grinder or hack saw, cut two lengths of punched angle iron to the measurement taken for 'Value Xmm'.

Snip off the four corners of the punched angle iron to add a degree of safety and neatness to the installation.

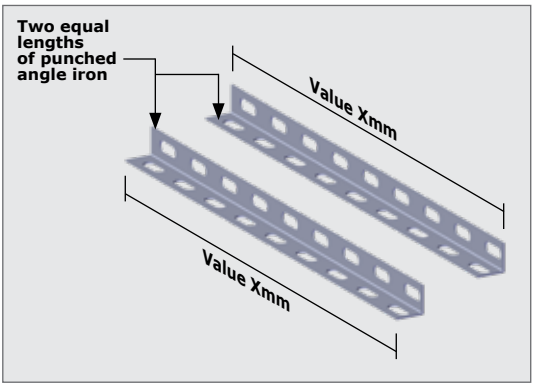


FIGURE 63

Remove the two drive rail hanger nuts from the gutter bolts, and locate the two lengths of punched angle iron into position as shown in Figure 64. Secure them in position with the two drive rail hanger nuts.

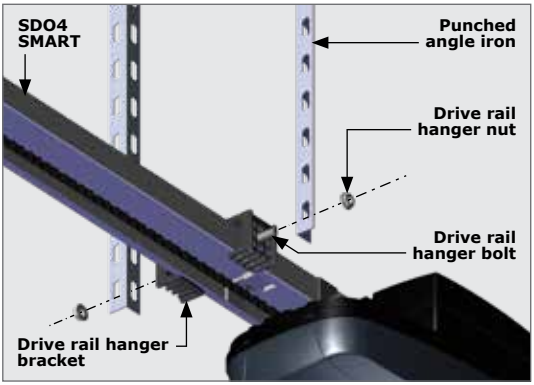


FIGURE 64

Align the holes of the punched angle iron mounted to the ceiling, with the holes on the punched angle iron mounted to the drive rail hanger. Secure it into position using two supplied M8 flange bolts and nuts with a 13mm socket.

Ensure that the **SDO4 SMART** control unit is in line with the top edge of the open garage door before tightening the bolts in their final position.

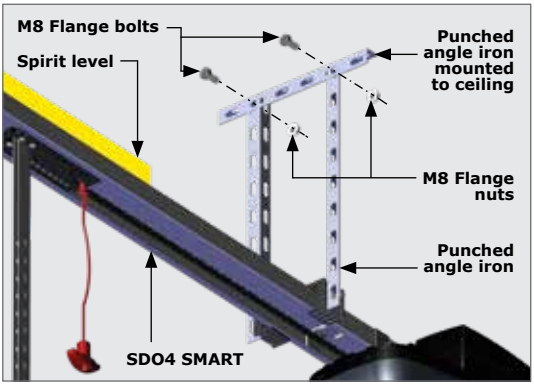


FIGURE 65

Correct and incorrect configurations for mounting the **SDO4 SMART** to the ceiling.

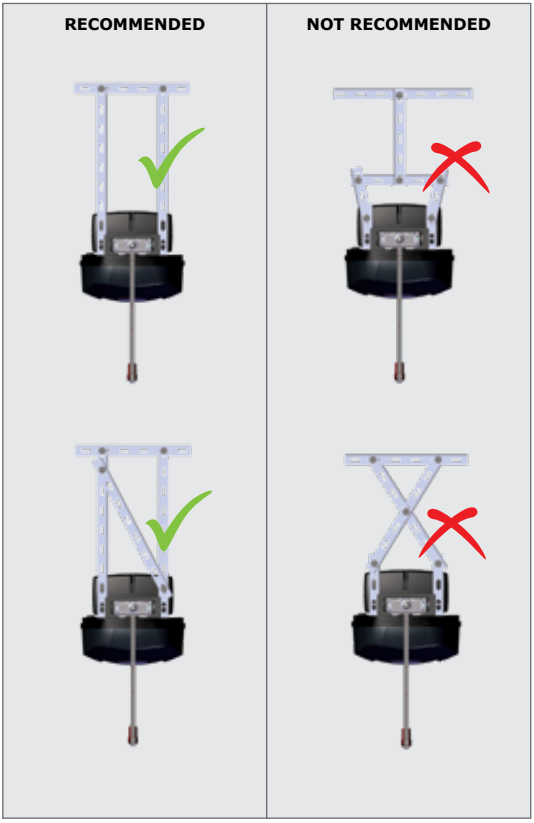


FIGURE 66

### 6.2.2.4. Mounting the towing bracket to the garage door.

Close the garage door, and find its center line.

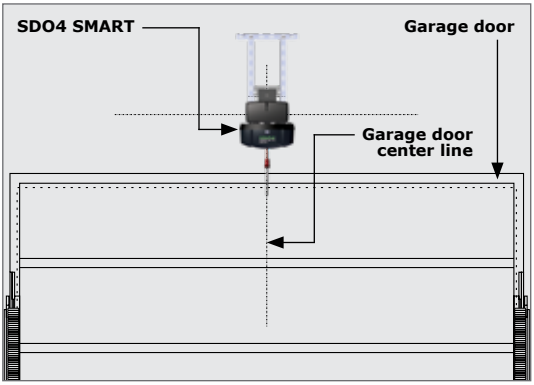


FIGURE 67

Center the towing bracket on the garage door center line and so that the top edge of the towing bracket is as close to the top edge of the garage door as possible.

Place a small spirit level on the top edge of the towing bracket, to ensure that it is level when drilling holes.

Secure the towing bracket into position using the three hexagonal head self-tapping screws supplied.

If the garage door is heavier than average, more screws can be used to fix the bracket to the garage door.

Ensure that the length of the screws does not exceed the depth of the garage door.

The above method is for the purpose of wooden garage doors. Should you have a garage door that is not constructed from wood, such as a steel garage door, we recommend the use of TEK® screws to secure the towing bracket to the garage door.

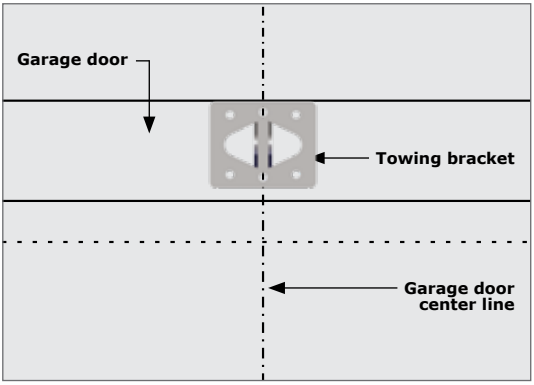


FIGURE 68

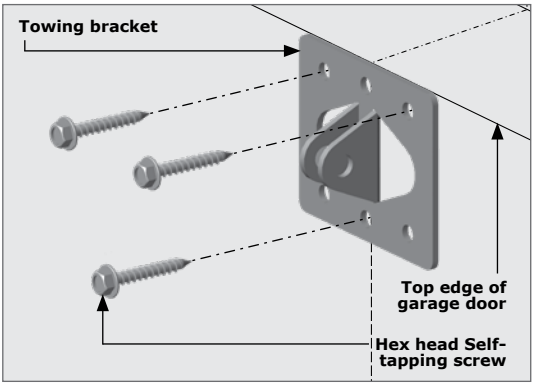


FIGURE 69

### 6.2.2.5. Fitting the bent towing arm to the towing bracket and straight towing arm.

Slot the bent towing arm between the two protruding tabs of the towing bracket, and align the holes. Note the orientation of the bent towing arm.

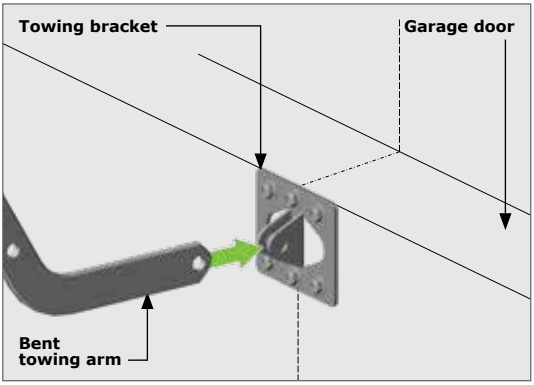


FIGURE 70

Locate the short clevis pin through the holes and secure it into position with a supplied E-Clip on the other end of the clevis pin.

Split Pins have also been supplied should they be preferred over the use of the circle pin clips.

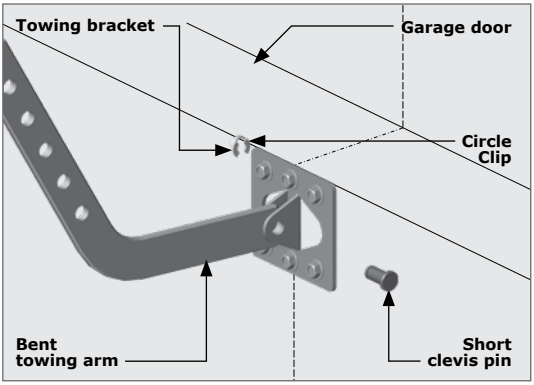


FIGURE 71

Slot the bent towing arm into the straight towing arm, and align the holes. If they do not align, move the carriage up or down the drive rail in order to align the holes of the bent and straight towing arms.

Ensure that the two towing arms overlap by at least two holes. This will ensure a strong join, and prevent the arm from swiveling whilst the motor is in operation.

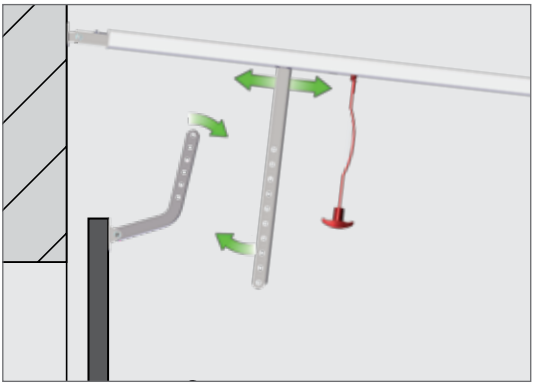

FIGURE 72

The two towing arms must be joined in such a way that they are just short of parallel to the garage door and the ceiling.
Angle 'Z' should be ±80° when the garage door is in the closed position, as shown in Figure 73.
This will put less strain on the motor on start-up and, furthermore, aid in preventing the garage door from being forced open by hand.

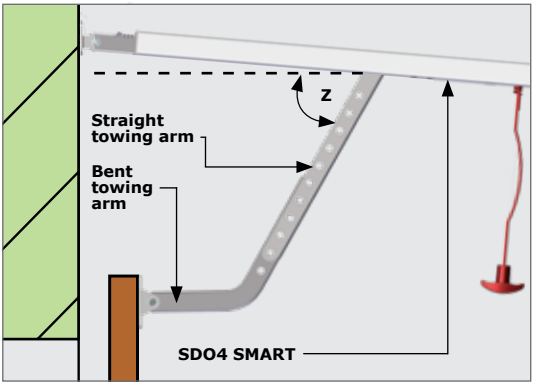


FIGURE 73

Once aligned, secure them into position using two supplied hexagonal head flange nuts and bolts: one set through the bottom hole of the straight towing arm, and the other through the top hole of the bent towing arm.

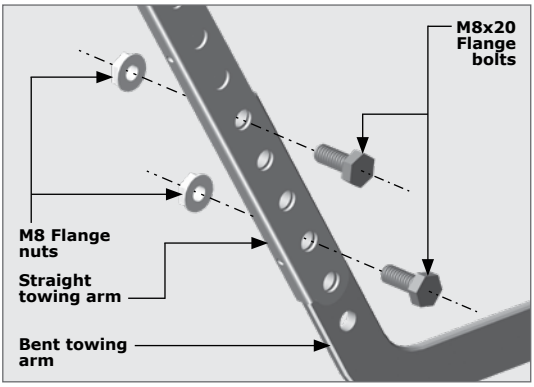


FIGURE 74

Please do not forget to affix the safety sticker and tag.

The **SDO4 SMART** is now installed and ready for programming.

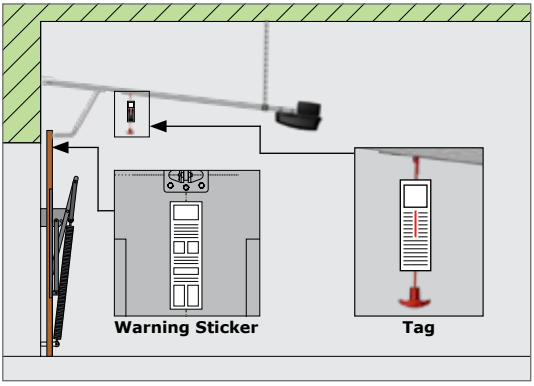


FIGURE 75

## 6.3. Engaging and Disengaging the Motor

### Functionality

- TO DISENGAGE - pull down on the release handle until you hear a 'click'
- TO ENGAGE - Pull the release handle back towards the control head until you hear a 'click', and move the carriage until it engages with the belt bullet (Figure 76)

- **Never attempt to open or close the garage door by pulling on the release handle. Doing so may result in SERIOUS PERSONAL INJURY and / or PROPERTY DAMAGE**
- **Always disengage the SDO4 SMART with the garage door in the fully closed position**
- **If attempting to disengage the SDO4 SMART from any position other than with the garage door fully closed, ensure that there are no persons and / or property near or directly under the path of the door**

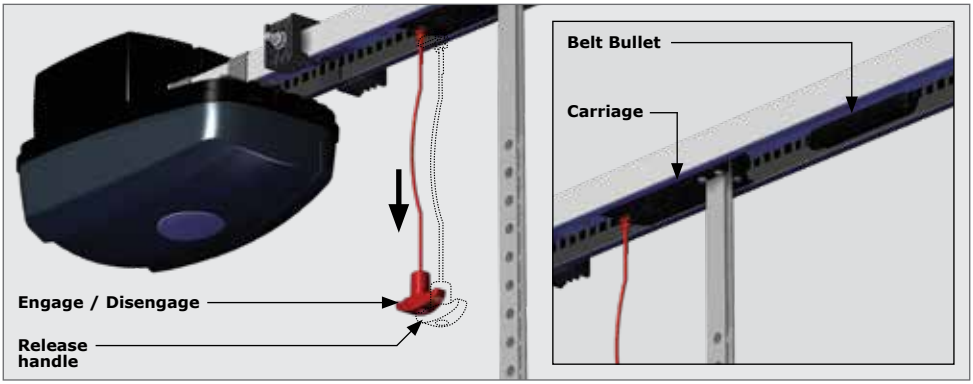


FIGURE 76

## 6.4. Emergency Lock Functionality

In the event of a system malfunction with the door in any position other than fully closed, the **SDO4 SMART** offers an emergency lock system that can be used to secure the door in the fully closed position.

In order to close and lock the door in the fully closed position, the user will need to disengage the operator using the manual release feature (see Section 6.3.).

**If attempting to disengage the SDO4 SMART from any position other than with the garage door fully closed, ensure that there are no persons, pets and / or property near or directly under the path of the door.**

1. Lower the door slightly by hand and re-engage the operator by pulling the manual release handle back towards the control head until you hear a 'click'.
2. Lower the door to the fully closed position.
3. Test that the door has locked in place by attempting to lift it by hand.
4. Once the system malfunction has been rectified, the system can be returned to automatic operation by disengaging the operator using the manual release feature (see Section 6.3.).

5. Open the door slightly by hand and re-engage the operator by pulling the manual release handle back towards the control head until you hear a 'click'.
6. Raise the door slowly to the fully open position until it engages with the bullet. A click will be heard as it engages.
7. The door is now ready for normal operation.

## 6.5. Positioning the Opening and Closing End-stops

The drive rail-mounted end-stops provide a one-to-one ratio between end stop movement and garage door movement, thereby ensuring 100% accuracy and ease of adjustment. Fully open and fully closed positions of the garage door can be easily adjusted by moving the ends-stops to the desired location in order to increase or decrease garage door travel.

Tighten the grub screws into position so that the flat-face of the screw butts firmly against the surface of the endstop. Note that the screws will indent the top of the rail.

**If grub screws are not securely tightened, the end-stops will fail during setup.**

### 6.5.1. Positioning the closing end-stop

- Ensure that the motor is disengaged
- Close the garage door fully
- Locate the closing end-stop within the drive rail - nearest to the front wall of the garage
- Position the end-stop 10mm away from the carriage, then tighten the two grub screws

### 6.5.2. Positioning the opening end-stop

- Ensure that the motor is disengaged
- Open the garage door fully
- Locate the opening end-stop within the drive rail - nearest to the back wall of the garage
- Position the end-stop 10mm away from the carriage, then tighten the two grub screws
- Re-engage the motor

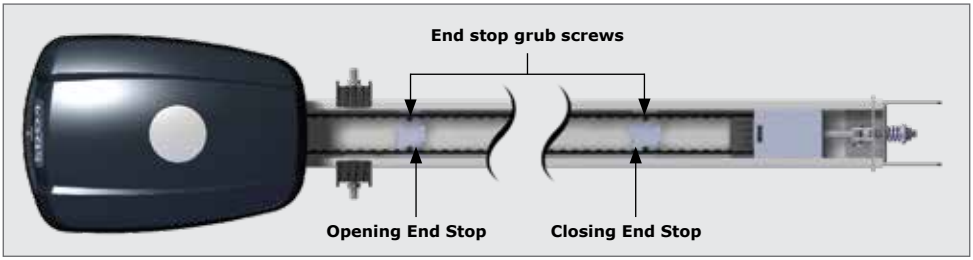


FIGURE 77

The closing and opening end-stops work on a one-to-one ratio with the garage door, meaning that, if the limit prong is moved by 10mm, then the garage door will also move by 10mm.

## 6.6. The Wireless Wall Switch

The wireless wall switch provided with the **SDO4 SMART** kit (T12 Model only) provides ease of installation, obviating the need for running hard wires to the switch. It can be mounted in a convenient location such as adjacent to a side entry door into the garage. The four buttons provided on the wall switch are for independently operating from one wall switch, the two openers of a double garage door installation. The buttons can be used for activating the various functions provided by the system.

Each individual button of the wall switch has been marked with a number, from one to four, to help the user identify which function each button operates. The buttons can be learned in any configuration.

The wireless wall switch must be mounted within sight of the garage door and a reasonable distance away from moving parts. It should be mounted at least 1500mm above the ground and the entrapment warning label provided, must be attached adjacent to the switch.

### Mounting

- The switch can be permanently screwed to the wall through the mounting holes provided or, alternatively, 'hooked' on the wall, providing the convenience of easy demount ability, through the 'hook' holes provided on the base cover
- To permanently mount the unit, open it, and place the back panel of the unit in the desired position on the wall

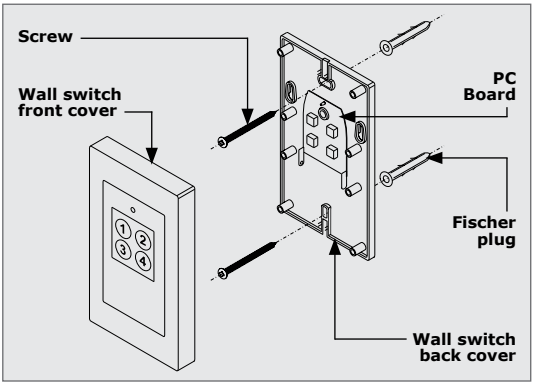


FIGURE 78

Take care not to damage the electronics when opening and handling the unit.

- Place a small spirit level on the top of the back panel to ensure that the unit will be level once mounted. Using a marking pen, mark the drill holes on the wall
- Drill two 6mm holes
- Locate two fischer plugs into the holes
- Align the back panel holes with the holes in the wall, and secure it into position using two screws
- Insert the battery, and replace the front cover
- The wireless wall switch may be learned into the **SDO4 SMART**'s memory via the MyCentsys Pro mobile application under "Remotes" at the bottom of the screen.

## 6.7. Safety Beams

- The Photon or other four-wire safety beams may be connected to the **SDO4 SMART**
- The installation of safety beams greatly enhances safety by constantly monitoring for persons or objects which may pass within the path of the moving garage door
- The **SDO4 SMART** will safety reverse if the safety beams become momentarily or permanently interrupted during a closing cycle
- A pair of Photon SMART infrared beams can be added to the SDO4 installation without running any wires, making it an easy and cost-effective solution that offers maximum safety

### 6.7.1. Four-wire safety beams

#### 6.7.1.1. Mounting

1. Mark the inside garage door framing so that the bottom edge of the beam sits 125mm off the floor.
2. Using a small angle bracket, fasten each beam to the wall so that they face each other across the garage door (Refer to installation instructions for further information).

#### 6.7.1.2. Connection

Follow the safety beam instructions and connect to the output terminals. Use the normally-closed contacts of the beam to connect to input 'SB' on the **SDO4 SMART**. Refer to Section 7 - "Electrical setup of accessories".

The **SDO4 SMART** provides a 24V DC output and normally-closed input for safety beams.

For aligning and testing the safety beams, please refer to the installation manual supplied with the respective safety beams used.

## 6.8. Connecting to a Power Supply

- Plug the **SDO4 SMART** into a properly-earthed 220 to 240V AC power outlet
- Ensure that no excess power cord hangs below the control box

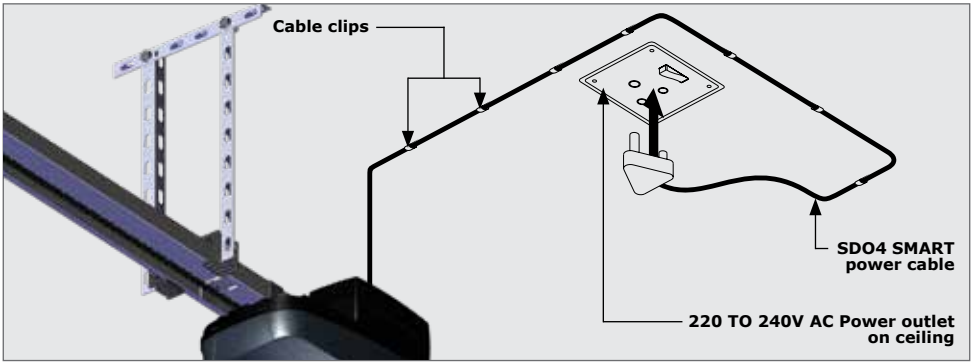


FIGURE 79

# 7. Electrical Setup of Accessories

- Two out (Power) and two in (Trigger and Safety beams) terminals are provided to support the connection of the most common external accessories
- The terminals can be accessed by removing the screw (Item 16) below the battery housing (Item 15), and hinging down the Control Head cover.
  Refer back to Section 3 - "Product Identification"
- The **SDO4 SMART** supports the Photon SMART infrared gate safety beams, which are completely wireless safety ancillaries. Photon SMART beams can also be added to another set of safety beams (wired or wireless) to add further functionality, safety and peace of mind to the automated setup. The Photon SMART also delivers a much neater and unobtrusive safety system as there is no need for unsightly mechanical safety devices hanging from the ceiling of the garage

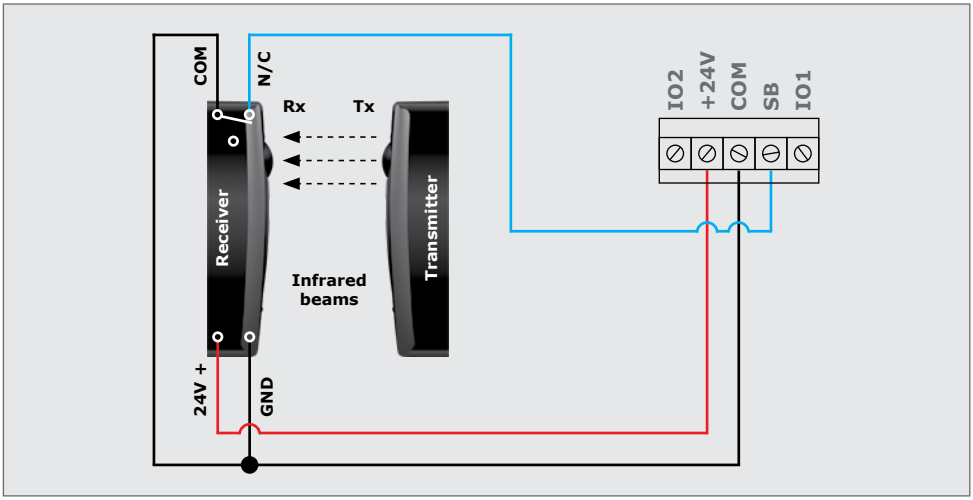


FIGURE 80. WIRING PHOTON SAFETY BEAMS TO THE SDO4 SMART (FOUR-WIRE)

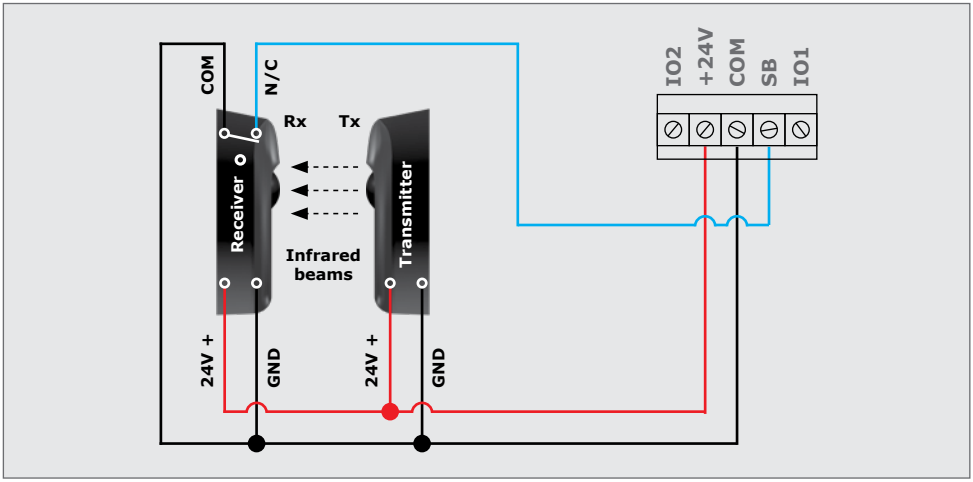


FIGURE 81. WIRING I5 SAFETY BEAMS TO THE SDO4 SMART (FOUR-WIRE)

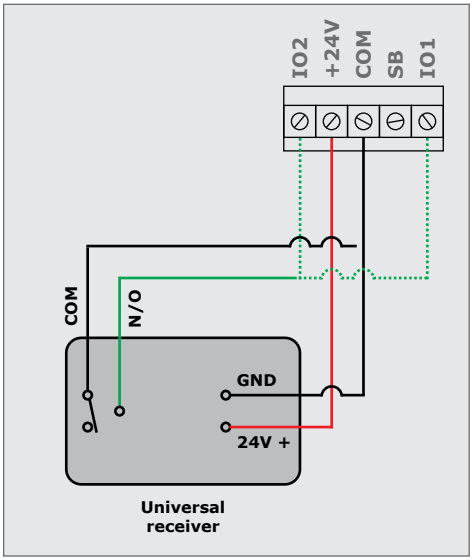


FIGURE 82. WIRING A UNIVERSAL RECEIVER TO THE SDO4 SMART

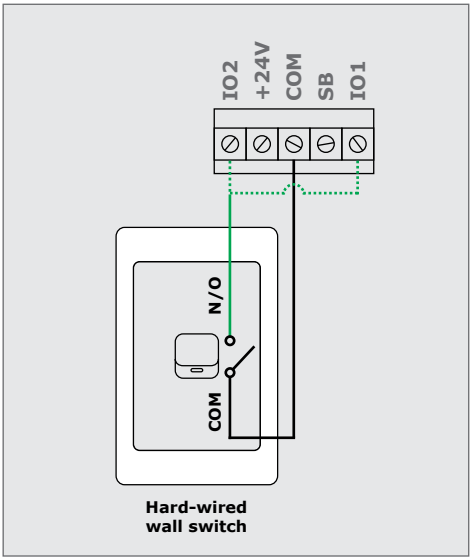


FIGURE 83. HARD-WIRING A WALL SWITCH TO THE SDO4 SMART

- The trigger/TRG (green wire) in Figures 82, 83 and 84 can be either wired into IO1 or IO2, depending on the sites individual needs
- IO1 and IO2 can be configured using the MyCentsys Pro mobile application
- IO1 is configured as trigger/TRG by default

Two WiZo-Link wireless modules may be connected to the system for a signal to be wirelessly relayed to a third party alarm in the event that the anti-tamper input is triggered.

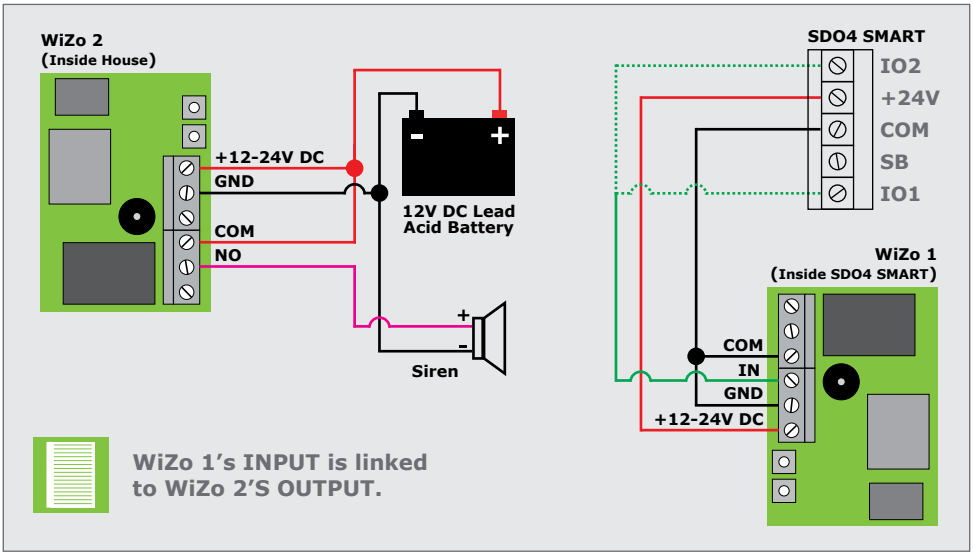


FIGURE 84. ANTI-TAMPER ALARM WIRING WITH TWO WIZOS

# 8. Commissioning the System

1. Scan the QR Code in Figure 85.
2. Select the App Store applicable to the operating system being used, either Apple iStore or Android Google Play Store.
3. Download and install the application.

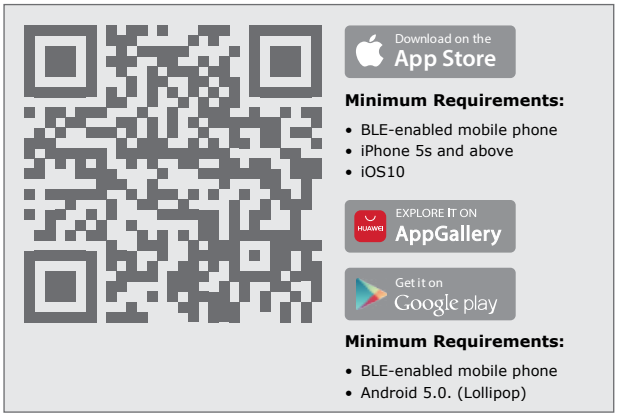


**FIGURE 85**

Alternatively, go directly to the app store of the operating system being used, and search for the app "**MyCentsys Pro**". Download and install the application onto the smartphone.

1. Once installed, open the application.
2. From the list of operators, select the operator that is applicable to this installation.
3. Connect to the relevant operator.
4. Use the app by following the prompts to configure the **SDO4 SMART**.

# 9. Installation Handover

Once the installation has been successfully completed and tested, it is important for the installer to explain the operation and safety requirements of the system.

**NEVER ASSUME THE USER KNOWS HOW TO SAFELY OPERATE THE SDO4 SMART.** Neither Centurion Systems (Pty) Ltd, nor its subsidiaries, accepts any liability caused by improper use of the product, or for use other than that for which the product was intended.

**Ensure that the user is in possession of the user guide and that you have completed the installation details in the back of the user guide.**

The following needs to be understood by the user:

- How to operate the manual release mechanism. (Show them how by demonstration)
- How the obstruction detection and all other safety features work. (Show them how by demonstration)
- All the features and benefits of the operator, i.e. Beams, etc.
- All the safety considerations associated with operating an automated garage door. The usershould be able to pass this knowledge on to all other users of the automated system and must be made aware of this responsibility.
- Do not activate the garage door operator unless you can see it and can determine that its area of travel is clear of people, pets, or other obstructions
- NO ONE MAY CROSS THE PATH OF A MOVING GARAGE DOOR. Always keep people and objects away from the gate and its area of travel
- NEVER LET CHILDREN OPERATE OR PLAY WITH THE GARAGE DOOR CONTROLS, and do not allow children or pets near the garage door area
- Be careful with moving parts and avoid close proximity to areas where fingers or hands could be pinched
- Secure all easily-accessible garage door operator controls in order to prevent unauthorised use of the garage door
- Keep the automated garage door system properly maintained, and ensure that all working areas are free of debris and other objects that could affect the garage door operation and safety
- On a monthly basis, check the obstruction detection system and safety devices for correct operation
- All repair and service work to this product must be done by a suitably qualified person
- This product was designed and built strictly for the use indicated in this documentation. Any other use, not expressly indicated here, could compromise the good condition/operation of the product and/or be a source of danger!

Centurion Systems (Pty) Ltd does not accept any liability caused by improper use of the product, or for use other than that for which the automated system was designed.

Ensure that the customer is in possession of the User Guide and that you have completed the installation details in the back of the User Guide.

# 10. Warranty Information

You can register your product(s) online at www.centsys.com, which will assist you in keeping a record of your date of purchase or installation, serial numbers, etc.

All of our products are manufactured with extreme care, thoroughly inspected and tested.

The goods supplied by us shall be subject to the provisions of sections 55 to 57 of the Consumer Protection Act (68/2008) except where the provisions of the warranty contained in our product documentation are more favourable to the purchaser.
Subject to the warranty contained in our product documentation, if applicable, our products are warranted for a period of twenty-four months after delivery.
However, it is expressly noted that batteries carry a six month warranty due to the nature of these products being such that they are subject to possible misuse. Please note that warranties will be honoured on a carry-in basis; in other words, the product in question must be taken in to one of our branches, or to the authorised reseller that the product was purchased from, for assessment and, if necessary, repair. For equipment not of our manufacture, the warranty as supplied by the original manufacturer will apply if such warranty is more favourable to the purchaser than the relevant provisions of the Consumer Protection Act (Act 68/2008 of South Africa), or any other applicable law as so required in different countries in which the product was sold.
Such warranty is valid only once full payment has been received for such goods.

**Any warranty may be voidable on any equipment which:**

1. Has not been installed in accordance with the installation instructions provided.
2. Has been subject to misuse or which has been used for any purpose other than that designed for by the manufacturers.
3. Has damage caused as a result of handling during transit, atmospheric conditions (including lightning), corrosion of metal parts, insect infestation, power surges or other forces outside of the control of the manufacturer.
4. Has been repaired by any workshop and / or person NOT previously authorised by the manufacturer.
5. Has been repaired with components not previously tested, passed or authorised by Centurion Systems (Pty) Ltd, South Africa or one of its subsidiary companies.

# Notes

# Notes

CENTURION

**Connect with us on:**

**facebook.com/centurionsystems**

**YouTube.com/centurionsystems**

**@askcenturion**

**centurion.systems**

**Subscribe to the newsletter: www.centsys.com/subscribe**

**Call Centurion Systems (Pty) Ltd • South Africa**
**Head Office: +27 11 699 2400**

**Call Technical Support: +27 11 699 2481**
**from 07h00 to 18h00 (UTC+2)**

**E&OE Centurion Systems (Pty) Ltd reserves the right to change any product without prior notice**

All product and brand names in this document that are accompanied by the ® symbol are registered trademarks in South Africa and/or other countries, in favour of Centurion Systems (Pty) Ltd, South Africa.

The CENTURION and CENTSYS logos, all product and brand names in this document that are accompanied by the TM symbol are trademarks of Centurion Systems (Pty) Ltd, in South Africa and other territories; all rights are reserved.
We invite you to contact us for further details.

ISO 9001:2015 24 MONTH WARRANTY CE UK CA

**Doc number: 1262.D.01.0009_1**

**www.centsys.com**